ENGINEERING DESIGN AND CONSTRUCTION STANDARDS

TABLE OF CONTENTS

SECTION 3

STREETS AND RELATED WORK

SECTION	DESCRIPTION	PAGE
3-1	GENERAL REQUIREMENTS	3-1
3-2	ROADWAY TYPES AND GEOMETRICS	3-1
3-2.1	General	3-1
3-2.2	Horizontal Alignment	3-1
3-2.2(1)	Curb Return Radii	3-1
3-2.2(2)	Local Streets	3-1
3-2.2(3)	Other Streets	3-2
3-2.2(4)	Trucks And Buses	3-2
3-2.3	Intersections	3-2
3-2.4	Street Ends	3-2
3-2.5	Grading Of Streets	3-2
3-2.5.1	Centerline Profile	3-2
3-2.5.2	Design Cross Section	3-3
3-2.5.3	Roadway	3-3
3-2.5.4	Compaction Of Subgrade	3-4
3-2.5.5	Pavement Replacement	3-4
3-2.5.6	Roadway Taper	3-4
3-3	EASEMENTS	3-4
3-4	FIRE DEPARTMENT ACCESS	3-5
3-5.	STREET PAVEMENT PRESERVATION	3-6
3-6	THROAT LENGTH REQUIREMENTS	3-6
3-7	TRAFFIC CONTROL SIGNING AND STRIPING	3-8
3-8	TRAFFIC STUDIES	3-9
3-9	UNDERGROUND UTILITIES	3-10
3-9.1	General	3-10
3-9.2	Trench Excavation	3-11
3-9.3	Trench Backfill	3-11
3-9.4	Compaction	3-12
3-9.5	Trenching Longitudinal To Roadway	3-12
3-9.6	Trenching Transverse To Roadway	3-12
3-9.7	Jacking, Auguring Or Tunneling	3-12

DESIGN AND CONSTRUCTION STANDARDS
AND
SPECIFICATIONS

TABLE OF CONTENTS

SECTION 3

STREETS AND RELATED WORK

SECTION	DESCRIPTION	PAGE
3-10	SURVEYING AND MONUMENTATION	3-13
3-10.1	Description	3-13
3-10.2	Materials	3-13
3-10.3	Construction Requirements	3-13
3-11	STREET ILLUMINATION	3-14
3-11.1	Placement	3-14
3-11.2	Power	3-14
3-11.3	Community Relations	3-15
3.11.4	Equipment	3-15
3.11.5	Maintenance	3.15
3-12	GUARDRAILS	3-15
3-13	MAILBOXES	3-15
3-14	PAVEMENT PATCHING	3-16
3-14.1	Description	3-16
3-14.2	Materials	3-16
3-14.3	Cement Concrete Pavement Resurfaced With Asphalt concrete	3-16
3-14.4	Asphalt Concrete On Granular Base	3-17
3-14.5	Untreated Roadway Surface	3-17
3-14.6	Temporary Pavement Patching	3-17
3-14.7	Construction Requirements	3-17
3-14.7(1)	General	3-17
3-14.7(2)	Cement Concrete Pavement	3-18
3-15	ROCKERIES AND ROCKWALLS	3-18
3-15.1	Description	3-18
3-15.2	Materials	3-18
3-15.3	General	3-19
3-15.4	Construction Requirements	3-19
3-16	METAL HAND RAILINGS	3-20
3-16.1	Description	3-20
3-16.2	Materials	3-20
3-16.3	Fabrication	3-21
3-16.4	Installation	3-21
3-17	CEMENT CONCRETE SIDEWALKS	3-22
3-17.1	Description	3-22
3-17.2	Materials	3-22
3-17.3	Construction Requirements	3-22

DESIGN AND CONSTRUCTION STANDARDS
AND
SPECIFICATIONS

TABLE OF CONTENTS

SECTION 3

STREETS AND RELATED WORK

SECTION	DESCRIPTION	PAGE
3-17.3(1)	General	3-22
3-17.3(2)	Forms And Fine Grading	3-23
3-17.3(3)	Placing And Finishing Concrete	3-23
3-17.3(4)	Curing And Protection	3-23
3-17.3(5)	Curing And Hot Weather	3-24
3-17.3(6)	Cold Weather Work	3-24
3-17.3(7)	Through And Contraction Joints	3-24
3-17.3(8)	Curb Ramps	3-25
3-18	CURB AND GUTTER	3-25
3-18.1	Description	3-25
3-18.2	Materials	3-25
3-18.3	Placing Concrete	3-26
3-18.4	Curing	3-26
3-19	CEMENT CONCRETE DRIVEWAY	3-26
3-19.1	Description	3-26
3-19.2	Materials	3-27
3-19.3	Construction Requirements	3-27
3-19.3(1)	General	3-27
3-19.3(2)	Driveway Location	3-27
3-19.3(3)	Driveway Separation or Spacing	3-28
3-19.3(4)	Frequency of Driveways..	3-28
3-19.3(5)	Driveway Design Considerations	3-29
3-19.3(6)	Commercial Driveways	3-30
3-19.3(7)	Residential Driveways	3-30
3-19.3(8)	Intersection Type Criteria	3-30
3-19.3(9)	Excavation and Subgrade	3-31
3-19.3(10)	Forms and Fine Grading	3-31
3-19.3(11)	Placing and Finishing	3-31
3-19.3(12)	Curing and Protection	3-31
3-20	PROPORTIONING OF MATERIALS	3-32
3-20.1	Controlled Density Fill	3-32
3-20.2	Gravel Borrow	3-32
3-20.3	Everett No. 2 Washed Coarse Sand	3-33
3-20.4	Spawning Gravel	3-33
3-20.5	Crushed Surfacing	3-33
3-20.6	Foundation Material Class A	3-34
3-20.7	Quarry Rock	3-34
3-20.8	Non-Shrink Cement Sand Grout	3-34
3-20.9	No. 2 Coarse Aggregate	3-34

DESIGN AND CONSTRUCTION STANDARDS
AND
SPECIFICATIONS

SECTION 3

STREETS AND RELATED WORK

3-1 GENERAL REQUIREMENTS

All work performed in the design, preparation of plans and in the construction or improvement of city streets and all appurtenances, whether public or private shall be the responsibility of the developer or contractor and done to the satisfaction of the city engineer and in accordance with the plans and specifications approved by the city for the work.

It is emphasized that no permits will be issued to start work until plans for that work are approved. Any revisions to the plans shall be approved by the city engineer before being implemented. A set of "as-built" drawings (mylars) will be required at the completion of the project and prior to final acceptance of the work. See individual utility sections for more specific "as-built" requirements.

City Ordinances and Standards establish policy for the installation of street improvements. Specific application will be determined at the time of permit application and or issuance.

3-2 ROADWAY TYPES AND GEOMETRICS

3-2.1 GENERAL

City of Snohomish roadways are classified functionally as indicated in Standard Plan No. 300. Criteria for minimum right-of-way and roadway widths and other geometrics shall be as listed for given classifications.

Structural sections and roadway appurtenances shall be as shown on Standard Plan Nos. 301 and 302.

The City Engineer may require the second lift of asphalt to be bonded and delayed for up to one year.

Typical utility locations for design purposes are shown on Standard Plan No. 322.

3-2.2 HORIZONTAL ALIGNMENT

3-2.2(1) CURB RETURN RADII

Radii of 40 feet or more should be three centered compound curves or simple curves with tapers to fit the paths of appropriate design vehicles.

3-2.2(2) LOCAL STREETS

For the intersection of two local streets, the minimum allowable curb radius shall be 25 feet, which is to be measured from the radius point to the face of curb.

For the intersection of a local street with any collector or arterial, the minimum radius shall be 30 feet.

3-2.2(3) OTHER STREETS

On all other street intersections, the minimum allowable radii shall be 30 feet.

3-2.2(4) TRUCKS AND BUSES

Radii of 40 feet or more should be provided where large truck combinations and buses turn frequently. Larger radii are also desirable where speed reductions would cause problems.

3-2.3 INTERSECTIONS

Intersections

Angle of Intersection	80° to 90°
Minimum Centerline Radius	N/A
Minimum Curb Radius	25 feet

3-2.4 STREET ENDS

Cul-de-sacs shall be provided at all permanent street ends and on any temporary dead end location when the length of the street is more than 150 feet in length. Cul-de-sacs shall be per Standard Plan No. 304.

On temporary dead ends, when the street is less than 200 feet in length, the required turnaround area may be a hammerhead type of design per Standard Plan No. 323.

3-2.5 GRADING OF STREETS

3-2.5.1 CENTERLINE PROFILE

The centerline profile of the street and accompanying centerline elevations are approved by the Department of Public Works and developed by the developer's professional civil engineer for approval by the Director of Public Works.

When no profile has been established for the streets abutting and leading to the development site, the developer shall provide a survey of the street area by a licensed surveyor for the purpose of establishing the proposed centerline profile. The survey shall extend the full length of the block and be based on City of Snohomish datum, with City of Snohomish bench mark elevations and locations, and field book pages and numbers referenced on the survey. (Field books containing bench mark and monument information are located in the Engineering Division at City Hall.)

The profile shall have a constant slope from cross-street to cross-street, with vertical curves as needed at street intersections. Additional slope changes within the block are permitted only when a constant slope cannot be obtained.

The minimum roadway profile grade permitted is 1%.

The minimum vertical curve for roadways is 75 feet. The point of vertical curvature (pvc) shall not encroach into a cross street any further than the cross street center of pavement.

Minimum horizontal curves with super elevation are as follows:

Principal Arterials
Minor Arterials - 410 feet

Collector Arterials
Commercial Access Streets - 300 feet

Residential Access Streets - 115 feet

3-2.5.2 DESIGN CROSS SECTION

Whenever possible, street improvements shall conform to the standard street cross section. The standard roadway cross slope is 2% down from crown to gutter line. In areas where pavement width is being added to an existing street, the slopes may vary, when necessary, as follows: maximum permitted cross slope is 4% (a variance may be approved up to 5% by the Public Works Director per Section 1.9 of these standards); minimum permitted cross slope is 1%.

The standard alley cross slope is 4.7%. When necessary to provide access to existing driveways and garages along the alley, the alley cross slope may be adjusted as needed, to a maximum cross slope of 6% and a minimum of 2%.

A typical cross section with dimensions shall be shown on the street improvement plans. In addition, design cross sections are required for proposed street and alley improvements every 25 feet for the length of the improvement, and shall include a cross section at each end of the improvement, at all driveways, and at all building entrances located within ten feet of the property line.

The design cross sections shall show existing and proposed grades, with spot elevations provided at the centerline, existing edge of pavement, gutter line, top of curb or thickened edge, back of sidewalk, property lines, catch lines, and any retaining walls or rock facing. The cross sections shall be stamped and signed by the design engineer. The existing elevations shall be based on recent survey data. Elevations on design cross sections shall be consistent with elevations shown on the Building Grade Sheet.

3-2.5.3 ROADWAY

Roadway design includes:

Grading to the approved profile and cross section elevations (see previous section)
Pavement type, depth and width
Curb type and location
Roadway drainage
The transition from the improvement area to the existing roadway

3.2.5.4 COMPACTION OF SUBGRADE

The subgrade must be compacted to 95% of maximum dry density for all street and alley improvements. Subgrade materials that cannot be compacted to this density shall be over-excavated (removed) and the subgrade replaced with approved material. Soil tests will be required during construction to show that the required compaction has been obtained.

3.2.5.5 PAVEMENT REPLACEMENT

When new street improvements are required and the existing pavement is in poor condition, it shall be replaced or restored. Examples of this reconstruction are as follows:

When existing asphalt or seal coat pavement is in poor condition, the applicant shall overlay the existing pavement with a minimum two inch depth of asphalt. When the existing pavement cross slope is less than 1% or greater than 4%, the existing pavement shall be adjusted as necessary to provide a cross slope that falls within these limits.

On Portland Cement concrete streets, when the existing concrete pavement depth is less than the depth of the designed pavement, and when the panels are in poor condition, the existing pavement shall be replaced. If the existing panels are in good condition they may remain, with new pavement installed to the design depth. Tie bars for longitudinal joints and/or load transfer dowels for transverse joints may be required between new and existing pavement, depending on the condition of the existing pavement. In most cases, tie bars and dowels shall be required between new concrete panels on arterials, commercial access streets, and residential access streets used by trucks and buses

3-2.5.6.1 ROADWAY TAPER

For permanent roadway tapers, the standard taper length for the narrowing from two lanes to one lane or offsetting of a lane is $L = WS^2/60$, where L is the length of taper in feet, W is the lane offset in feet, and S is the design speed in miles per hour.

Temporary asphalt tapers are allowed for narrowing a single lane when additional street improvements are anticipated in the future. The standard taper for temporary tapers is 25:1. See Standard Drawing Number 329.

3-3 EASEMENTS

A nonexclusive easement shall be reserved for and granted to all utilities serving subject plat and their respective successors and assigns, over, under and upon the exterior 10 feet parallel with and adjoining the street frontage of all lots and common areas in which to install, lay, construct, renew, operate and maintain underground conduits, cables, pipes, and wires; together with other necessary facilities and equipment, for the purpose of serving this subdivision and other property with utility service, together with the right to enter upon the lots at all times for the purposes herein stated.

3-4 FIRE DEPARTMENT ACCESS

As required by the Fire Chief, every building constructed shall be accessible to the fire department, both during and after construction, by way of access roadways approved by the fire department. The roadway shall have at least 20 feet of unobstructed width, shall have adequate roadway turning radius, and be capable of supporting the imposed loads of fire apparatus. The minimum allowable vertical clearance shall be 13 feet 6 inches. All required fire access roads must be in service prior to commencement of construction.

When access roads cannot be installed due to topography, waterways, nonnegotiable grades, or other similar conditions, the Chief is authorized to require additional fire protection as specified in Section 10.501(b) of the Uniform Fire Code. Such devices or appliances may consist of automatic fire alarm systems, automatic sprinkler or water spray systems, standpipe and hose, fixed or portable fire extinguishers, suitable fire blankets, breathing apparatus, manual or automatic covers, carbon dioxide, foam, halogenated or dry chemical or other special fire-extinguishing systems. Where such systems are provided, they shall be designed and installed in accordance with the applicable Uniform Fire Code Standards.

The following definitions shall apply:

A. **Fire Lane:** That portion of the fire department access to areas or structures which is required by the provisions of Chapter 19.04.070 of the Snohomish Municipal Code. Generally, this access is in larger complexes and constitutes continuous loops around buildings or complexes.

B. **Fire Access Road:** That portion of the fire department access to areas or structures which is required by the provisions of the current Uniform Fire Code edition or subsequent revision. This type of access may be provided to almost any type of property.

C. **Access Easement:** That portion of a "fire access road" as defined above which is provided by the granting of a permanent easement over one or more properties in order to provide permanent access to other properties.

The required 20 feet of access shall consist of a suitable native or fill material topped with four inches of crushed surfacing top course, compacted to 95% of maximum density on both surfaces. It shall be provided with an approved all season driving surface. A permanent short plat fire access roadway shall be designed to support a minimum of a 40,000 lb vehicle

Temporary access roads in use during building construction shall be constructed for all weather driving conditions. At no time during the construction of the project should the roadway surface consist primarily of dirt, mud, sand, or other material that, in the opinion of the Fire Chief, may impair fire fighting or rescue operations. The required 20 foot width must be maintained so that the driving surface is recognizable day or night.

The required width of any fire apparatus access road shall not be obstructed in any manner, including parking of vehicles. Minimum required widths and clearances established under this section shall be maintained at all times. The required cul-de-sac turnaround for fire apparatus shall be per Standard Drawing No. 304.

The access roadway shall be extended to within 150 feet of all portions of the exterior walls of the first story of any building. Where the access roadway cannot be provided, due to topography, waterways, nonnegotiable grades, or other similar conditions, the City Engineer may request additional fire protection.

More than one fire apparatus road may be requested when it is determined by the City Engineer that access by a single road may be impaired by vehicle congestion, condition of terrain, climatic conditions, or other factors that could limit access.

The requirements of the section may be modified when, in the opinion of the City Engineer or his designee, fire fighting or rescue operation would or would not be impaired.

3-5 STREET PAVEMENT PRESERVATION

No permit shall authorize an open cut crossing of a newly paved or overlaid asphalt street for a period of five years after paving, and directional bore shall be required in such circumstances. The City Engineer or designee may grant exemptions to this requirement in order to facilitate development on adjacent properties, to provide for emergency repairs to subsurface facilities, to provide for underground service connections to adjacent properties or to allow the upgrading of underground utility facilities.

When granting exceptions to this restriction, the City Engineer may impose conditions determined appropriate to insure complete restoration of the street and the surface paving. In addition to complying with the City Engineering Design and Construction Standards, conditions may include ADA improvements, surface grinding, base and sub-base repairs, or other related work as needed, and up to full-width surface paving of the roadway. The length of restoration will be determined by the City Engineer.

In addition to a right of way permit, any person who is required to partially or fully repave a street shall be responsible for the full cost of plan review, construction inspection, material testing, bonding, other permits and all other City fees related to the work.

If the City Engineer determines that final repaving of the street is not appropriate at that particular time for reasons relating to weather or other short term problems, the City Engineer may grant a delay until proper conditions allow for repaving subject to bonding or other acceptable security as deemed appropriate by the City Engineer.

3-6 THROAT LENGTH REQUIREMENTS

The throat length is the unobstructed storage length requirement measured from the inside face of curb to the first driveway or parking stall. Distances may be reduced for multiple driveways as approved by the City Engineer. Minimum throat lengths for each particular land use are as shown on the following table:

MINIMUM THROAT LENGTHS

Land Use	Size		Min Throat Length Collector (ft)	Min Throat Length Arterial (ft)
Light Industrial	<	100,000 sq. ft.	25	50
		100,001-500,000 sq. ft	50	100
	>	500,000 sq. ft.	50	200
Discount Store	<	30,000 sq. ft.	25	50
	>	30,000 sq. ft.	25	75
Shopping Center	<	250,000 sq. ft.	25	50
		250,001-500,000 sq. ft.	50	75
		500,001-750,000 sq. ft.	75	200
	>	750,000 sq. ft.	125	250
Supermarket	<	20,000 sq. ft.	50	75
	>	20,000 sq. ft.	75	125
Apartments	<	50 units	25	25
		50-100 units	25	50
		100-200 units	50	75
	>	200 units	75	125
Quality Restaurant	<	15,000 sq. ft.	25	50
	>	15,000 sq. ft.	25	75
Drive-in Restaurant	<	2,000 sq. ft.	25	75
	>	2,000 sq. ft.	50	100
General Office	<	50,000 sq. ft.	25	50
		50,001-100,000 sq. ft.	25	75
		100,001-200,000 sq. ft.	50	100
		200,001-500,000 sq. ft.	100	150
	>	500,000 sq. ft.	125	250
Motel	<	150 rooms	25	75
	>	150 rooms	25	100

3-7 TRAFFIC CONTROL SIGNING AND STRIPING

All traffic control devices, signing, striping, and other pavement delineation shall conform to the Manual on Uniform Traffic Control Devices (MUTCD). It shall be the developer's responsibility to furnish all materials and labor as required to install all traffic control as required by the City Traffic Engineer. All required signing (traffic control and street name signs), striping, and other delineation as required, shall be shown on the street improvement plans prior to plan approval.

3-8 TRAFFIC STUDIES

A. Responsibility for Traffic Studies

Traffic studies are required by the city for all developments in the City that develop 50 or more "peak hour" trips in either the A.M. or P.M. peak hour, or deemed necessary by the City Engineer. Developments that develop less than the 50 trip threshold have the option of paying a fee of $80.00 per daily trip or preparing a traffic study to outline the impacts and mitigations. The primary responsibility for assessing the traffic impacts associated with a proposed development will rest with the developer and with the City serving in a review capacity.

The study is the responsibility of the applicant and must be prepared by a registered professional engineer with adequate experience in transportation traffic and/or transportation planning.

B. Traffic Study Format

1. Land Use:

   A brief description of the size of the land parcel, general terrain features and location within the city must be included in this section. In addition, the roadways that afford access to the site, and are included in the study area, must also be identified.

2. Existing and Proposed Site Uses:

   The existing and proposed uses of the site must be identified. The intent of the traffic study is to evaluate the traffic impacts due to the development. If the final use is not clear, the land use with the greatest overall traffic impact must be assumed for the study.

3. Project Trip Generation and Distribution:

   The project trip generation is to be determined by the latest approved edition of the ITE Trip Generation Manual, unless otherwise required or approved by the City Engineer.

   The developments peak hour trips are to be distributed through the street network to a level of ten peak hour trips.

4. Existing and Projected Volumes:

   Existing traffic volumes including turning movement counts will be provided by the City when available. Growth shall be calculated at 4% per year compounded annually.

   Separate graphics shall be provided for the existing volumes, for the site generated volumes, and for the cumulative SEPA project volumes. An additional graphic shall be provided compiling all of the information at the horizon year. Volumes including turning movements shall be shown throughout the study area for normal and peak hours.

5. The following Tables should be provided in the study:

Table A

LEVELS OF SERVICE (LOS)				
Intersection	**Existing**	**2004 w/project**	**1998 w/o projects**	**1998 w/mitigations**

Table B

VOLUME					
Roadway Section Intersection	**Project a.m. p.m. (1)**	**Existing a.m. p.m. (2)**	**2004 a.m. p.m. (3)**	**Proj. Vol. as % of Diff. 1/(3-2)**	**Proj. Vol. as % of Total 1/3**

NOTE: The horizon year is normally five years from the date of project application. A horizon year of 2004 is used here for illustrative purposes only.

6. Traffic Accidents:

   Traffic accident information may be required for effected street corridors and intersections. The study period will normally be three years. Information is available from the City.

   Estimates of increased or decreased accident potential must be evaluated for the development particularly if the proposed development might impact existing traffic safety problems in the study area. Safety mitigation measures must be included where necessary.

7. Recommendations:

   In the event that analysis indicates unacceptable Levels of Service (LOS) in the study area, a description and cost estimate of the proposed improvements to return intersection to an acceptable LOS is required. The cost estimates should be all inclusive and include any additional right-of-way as required.

8. The Study shall also analyze the interface of entrances and exits with the City street system. The study shall also make recommendations regarding site circulation for both vehicles and pedestrians including handicap access.

3-9 UNDERGROUND UTILITIES

3-9.1 GENERAL

1. The WSDOT/APWA Standard Specifications shall apply unless otherwise stated below.

2. When trenching through existing pavement, the open cut shall be a neat line made by saw cutting a continuous line. Saw cutting will be required unless the cut is made prior to reconstruction or an overlay.

3. Temporary pavement patch shall be accomplished by using cold mix (MC 250), ATB or steel plates.

4. Permanent pavement patch shall be as specified on Standard Drawing No. 316.

5. Where trench excavation equals or exceeds a depth of four feet, the developer/contractor shall provide, construct, maintain, and remove, as required, safety systems that meet the requirements of the Washington Industrial Safety and Health Act, RCW 49.17, including WAC 296-155. The trench safety systems shall be designed by a qualified person, and meet accepted engineering requirements (see WAC 296-155-660).

6. The developer/contractor shall furnish, install, and operate all necessary equipment to keep excavations above the foundation level free from water during construction, and shall dewater and dispose of the water so as not to cause injury to public or private property or nuisance to the public. Sufficient pumping equipment in good working condition shall be available at all times for all emergencies, including power outage, and shall have available at all times competent workmen for the operation of the pumping equipment.

7. Compaction tests will be required to ensure adequate compaction on all lifts. All compaction tests shall be conducted by a licensed testing laboratory at the expense of the developer/contractor. See Section 3-9.4 of these Specifications.

8. Reference to the City Engineer below means the City's representative on site.

9. Water setting of backfill in trenches is not permitted.

3-9.2 TRENCH EXCAVATION

The length of trench excavation in advance of pipe laying shall be kept to a minimum and in no case shall exceed 150 feet unless specifically authorized by the City Engineer. The maximum permissible trench width between the foundation level to the top of the pipe shall be 40 inches for pipe 15 inches or smaller inside diameter; or 1-1/2 I.D. plus 18 inches for pipe 18 inches or larger. If the maximum trench width is exceeded without written authorization of the City Engineer, the developer/contractor will be required to provide pipe of higher strength classification or to provide a higher class of bedding, as required by the City Engineer.

3-9.3 TRENCH BACKFILL

Suitable native material excavated during trenching shall be used for trench backfill unless notified by the City Engineer that the native material is unsuitable. The City Engineer or his representative will examine excavated native material at the time of excavation to determine its suitability for use as backfill. Native material will be considered suitable for trench backfill if it is:

A. Capable of attaining the degree of compaction specified in Section 3-9.4 Compactions.

B. Within reasonable tolerance of optimum moisture content.

C. Reasonably free of organic material, clay, frozen lumps, rocks, or other deleterious matter.

Unsuitable backfill material shall be removed from the site and hauled to an approved disposal site. The City Engineer shall be provided with the location of all disposal sites to be used and also copies of the permits and approvals for such disposal sites.

Imported material shall meet the requirements of gravel borrow as specified in Section 3-20.2 of these Standards or crushed surfacing top course as specified in Section 9-03.9(3) of the WSDOT/APWA Standard Specifications and Section 3-20.5 of these Standards.

3-9.4 COMPACTION

Trench backfill shall be spread in layers and compacted by mechanical tampers of the impact type approved by the City Engineer. The backfill material shall be placed in successive layers with the first layer not to exceed two feet above the pipe, and the following layers not exceeding 12 inches in loose thickness with each layer being compacted to the density specified below:

A. Improved areas such as street and sidewalks shall be compacted to 90% of maximum dry density to within three feet of subgrade. The last three feet shall be compacted to 95% of maximum dry density.

B. Unimproved area or landscape areas shall be compacted to 90% of maximum dry density.

3-9.5 TRENCHING LONGITUDINAL TO ROADWAY

Sewer, water and storm lines that are within the roadway section and longitudinal to the roadway shall be backfilled with native material or gravel borrow as approved by the City Engineer to the pavement patch level or subgrade whichever applies. All other utility cuts such as gas, telephone, power, and cable TV shall be backfilled with controlled density fill.

3-9.6 TRENCHING TRANSVERSE TO ROADWAY

Utility trenching that crosses transversely to the roadway alignment will generally not be permitted unless it can be shown that alternatives such as jacking, auguring or tunneling are not feasible or unless the utility can be installed just prior to reconstruction or an overlay of the road. Should an open cut be approved, the top four feet minimum of the trench shall be backfilled with **controlled density fill**. When high ground water levels are encountered, relief drains shall be installed at 15 feet intervals to prevent damming. The relief drains shall be three-inch PVC and placed at a minimum three feet from finished grade or as otherwise approved by the City Engineer.

3-9.7 JACKING, AUGERING, OR TUNNELING

Tunneling may be ordered by the City Engineer under pavements, buildings, railroad tracks, etc. The developer/contractor shall install the pipe by jacking, auguring or tunneling, or installing the pipe in a casing pipe by a combination of these methods.

When use of a casing pipe is required, the developer/contractor shall be responsible to select the gauge and size required, unless otherwise indicated on the drawings, and consistent with his jacking or auguring operation, and shall be set to line and grade. During jacking or auguring operations, particular care shall be

exercised to prevent caving ahead of the pipe which will cause voids outside the pipe. When the carrier pipe is installed within a casing pipe, the carrier pipe shall be skidded into position in an acceptable manner and to the line and grade as designated. The annular space between the casing and the pipe shall be filled with controlled density fill or as otherwise approved.

The faces of the jacking pit shall be constructed by driving steel sheets, or installing timber lagging as the excavation proceeds. The sheets, or lagging, shall extend a minimum of five feet below the bottom of the pit except at the entrance of the utility. Prior to jacking or auguring activities, shop drawings describing these activities, including dimensioning of pit length and size of underground borings and complete description of shoring, shall be submitted to the City Engineer for approval.

3-10 SURVEYING AND MONUMENTATION

3-10.1 DESCRIPTION

This work shall consist of all the surveying and monumentation required to construct the project as described in the plans and these Specifications.

It shall be the responsibility of the developer/contractor to furnish materials and install monuments and castings in accordance with the drawings and where directed by the City Engineer. All survey work shall be performed by or under the direct supervision, of a Professional Land Surveyor (PLS) licensed in the State of Washington and using Washington State Coordinate system NAD83 Horizontal, NGVD 1929 vertical datum, North Zone U.S. Foot Coordinate System. Monument and monument case and cover shall be supplied and installed per Standard Plan No. 313.

Surveying, as required to construct a given project per the approved plans, shall be furnished by the developer at no expense to the City. It is required that survey stakes be set for new curb and gutter construction, for both horizontal and vertical control. Additionally, any water, storm drain, or sanitary sewer mains which are to be constructed in easements are to have survey offset stakes set prior to starting that work, and any deviation from that staked line must be left uncovered and resurveyed to realign easement as required and for corrected as-built information.

3-10.2 MATERIALS

Materials for monumentation shall be Class 3000 concrete or commercial concrete per Section 6-02 of the WSDOT/APWA Standard Specifications and the monument case and covers shall be gray iron castings conforming to the requirements of AASHTO M 105, Class 30B. The cover and seat shall be machined so as to have perfect contact around the entire circumference and full width of bearing surface.

3-10.3 CONSTRUCTION REQUIREMENTS

Monuments shall be located at all centerline intersections of intersecting streets. Curved streets shall be monumented at centerline PI's (point of intersection), if it falls within the street pavement, otherwise the PC (point of curvature) and PT (point of tangency) of the curve shall be monumented.

It shall be the developer's/contractor's responsibility to provide the surveying required to establish or perpetuate land corner monumentation as may be required on the project.

All land corner surveying shall conform to the requirements of RCW 58.09. If the developer's or contractor's surveyor replaces or restores an existing or obliterated "General Land Office" (GLO) corner(s), it shall be their responsibility to file "Land Corner Records" for these monuments with the Snohomish County Auditor's Office.

When all land corners have been established, replaced or restored and monumented as described herein, the surveyor shall certify this information with a letter to the City Engineer. This certification letter shall include the location of the monumented corner(s) and that all land corner(s) have been monumented as described and required herein. All land corners and lot corners shall be in place prior to acceptance of final development as-builts and building construction.

The City reserves the right to check survey points and/or the correct locations and elevations of new construction. These spot-checks will not change the requirements for normal checking and testing as described elsewhere, and do not relieve the contractor of the responsibility of producing a finished product that is in accordance with the contract. If unacceptable errors are found due to errors or omissions by the contractor's survey activities, then the contractor shall correct these errors including removing and replacing improvements and pay all expenses incurred by the City including the re-survey.

3-11 STREET ILLUMINATION

Street light design, height and wattage shall be approved by the City Engineer per WSDOT design manual specifications chapter 840.

Typically street lights shall be provided in plats and for commercial developments. Street light poles shall be aluminum with a concrete base. Special ornamental poles may be installed with approval of the City Traffic Engineer. The luminaires are supplied and maintained by the Snohomish County Public Utilities District (PUD). Special luminaires, which are not supplied by the PUD, must be approved by the City Traffic Engineer. All street light wiring, conduit and service connections for new construction shall be located underground, unless otherwise approved by the City Engineer.

3-11.1 PLACEMENT

Street light locations must be approved by the City Engineer. Street lights shall be placed a minimum of 200 feet apart, but no more than 250 feet apart. Every intersection shall have one located as close to the intersection as is practical. In established areas light shall be placed so as to minimize interference from trees or other large objects. Where possible it is desirable to place the light on property lines, and at the edge of City right-of-way.

3-11.2 POWER

In new subdivisions, power will be supplied by the PUD under contract with the developer. All power is to be underground. In existing neighborhoods, power shall be supplied by the best method as approved by the City Engineer

3-11.3 COMMUNITY RELATIONS

In established neighborhoods, the party requesting a new light must contact impacted neighbors to determine interest in having a new street light placed. Neighborhood acceptance of the proposal, including the desired location is important. When the issue is a strong safety one consensus from the neighborhood may not be required. Final determination of the safety merits shall be the responsibility of the City Engineer.

3-11.4 EQUIPMENT

In general, all new City lights shall be mounted on either an existing utility pole or a standard fiberglass pole. Heads shall be either cobra head. Special ornamental poles may be installed with approval of the City Engineer. The luminaires are supplied and maintained by the Snohomish County PUD. Special luminaires, which are not supplied by the P.U.D., must be approved by the City Engineer. The installation of special luminaires, not provided by the P.U.D., shall be the responsibility of the developer in new subdivisions or commercial areas.

Street lights shall be provided in plats and for commercial developments.

All street light wiring, conduit, and service connections shall be typically located underground.

3-11.5 MAINTENANCE

The City is responsible for maintenance of all underground wiring while the overhead wire and the luminaires are maintained by the PUD.

3-12 GUARDRAILS

Unenclosed floor and roof openings, open and glazed sides of stairways, landings and ramps, balconies or porches, which are more than 30 inches above grade or floor below, and roofs used for other than service of the building shall be protected by a guardrail. See Sections 1712 and 3306 of the latest edition of the Uniform Building Code for specific requirements.

For Safety Rail see Section 3-16 of these Standards and Standard Drawing Nos. 325, 325A, and 326.

Roadway guardrail installations shall conform to WSDOT/APWA Standard Plan C-1, Beam Guardrail Type 1. End anchors shall conform to WSDOT/APWA Standard Plan C-6, Beam Guardrail Anchor Type 1.

3-13 MAILBOXES

New residential developments shall have mailboxes installed similar to Standard Plan No. 320, or gang box supplied by the U.S. Postal Service similar to Standard Plan No. 321.

A. When mailboxes are located adjacent to the sidewalk, the sidewalk shall be widened to provide a clear width of not less than five feet from back of curb to any portion of the mailbox structure, per Standard Plan No. 321. If the mailboxes are set adjacent to curb, a bump-out of the curb may be required to provide the required five feet of sidewalk behind the boxes, in lieu of five feet sidewalk routing behind the boxes.

B. In the case of new road construction or reconstruction requiring mailboxes to be moved back or rearranged, the builder shall coordinate with the U.S. Postal Service through the Snohomish Postmaster in the main Post Office in Snohomish, for acceptable box locations and to ensure uninterrupted mail service. Approved locations for mailboxes shall be shown on street construction plans.

3-14 PAVEMENT PATCHING

3-14.1 DESCRIPTION

This work shall consist of the patching of various types of pavement cuts, the performances of which shall be in accordance with these Specifications, the WSDOT/APWA Standard Specifications and Standard Plan No. 316.

3-14.2 MATERIALS

All materials shall conform to the requirements specified for material in other sections of the WSDOT/APWA Standard Specifications as follows:

A. Asphalt concrete pavement patch shall be Class B meeting the requirements of Section 5-04.

B. Asphalt for temporary patch shall be MC 250 meeting the requirements of Section 9-02.

C. Cement concrete pavement patch shall be Class 4000 HES meeting the requirements of Section 6-02.

D. Crushed surfacing top course shall meet the requirements of Section 9-03.9.(3).

3-14.3 CEMENT CONCRETE PAVEMENT RESURFACED WITH ASPHALT CONCRETE

Streets which have cement concrete pavements surfaced with asphalt concrete shall be patched as shown on Standard Drawing No. 316.

The cement concrete portion of the patch shall be Class 4000, HES. The thickness shall be one inch thicker than the existing concrete base or six inches, whichever is greater. The top surface of the concrete patch shall match the top surface of the existing concrete base; in no case shall the top of the concrete be higher than the top of the existing concrete base. Brush finishing will not be required. Joints shall be placed to match existing or as directed by the City Engineer.

Asphalt concrete plant mix shall not be placed until three days after the cement concrete base has been placed or otherwise permitted by the City Engineer. The asphalt concrete plant mix shall not be placed until the concrete base has received a tack coat of CRS-2 at a rate of 0.12 to 0.20 gallons per square yard. The edges of the existing asphalt and castings shall also be painted with the tack coat. The asphalt concrete pavement shall then be placed, leveled, and compacted to conform to the surface of the existing asphalt pavement. Immediately thereafter, all joints between the new and original asphalt pavement shall be painted with CSS-1 asphalt emulsion and covered with dry sand before the asphalt solidifies.

Asphalt shall be compacted to 92% of maximum density as determined by WSDOT Test Method 705.

3-14.4 ASPHALT CONCRETE ON GRANULAR BASE

After the crushed surfacing top course sub-grade has been leveled and compacted, Asphalt Concrete Pavement Class B shall be placed to a thickness of one inch greater than the existing asphalt pavement depth or to a minimum of three inches, whichever is greater. Asphalt shall be compacted to 92% of maximum density as determined by WSDOT Test Method 705.

3-14.5 UNTREATED ROADWAY SURFACES

Existing crushed rock, gravel, and oil mat streets shall be restored with 5/8" crushed surfacing top course to a compacted depth of four inches within the neat lines of the trench. Crushed surfacing shall be mixed, placed, spread, and shaped in accordance with the requirements of Section 4-04 of WSDOT/APWA Standard Specifications. Compaction shall be as specified by one of the methods shown in Section 3-14.7(1) of these Specifications.

3-14.6 TEMPORARY PAVEMENT PATCHING

The contractor shall furnish, place, and maintain temporary pavement patching at locations as directed by the City Engineer until such time as a permanent patch of permanent paving can be made.

Temporary pavement patch shall consist of a two inch thick course of cold mix asphalt (MC 250) over a four inch course of 5/8" crushed surfacing top course. The crushed surfacing shall be compacted to 95% maximum density as determined by one of the methods described in Section 3-14.7(1) of these Specifications. Asphalt shall be compacted to 90 % of maximum density as determined by WSDOT Test Method 705.

Temporary asphalt patching shall be required where roadway or walkway is needed for vehicular or pedestrian traffic, during the construction period, until permanent pavement and sidewalks can be constructed.

In the event that the temporary surface subsides after the initial placement, additional MC 250 and crushed surfacing shall be applied to maintain the surface.

3-14.7 CONSTRUCTION REQUIREMENTS

3-14.7(1) GENERAL

Pavement patching shall be scheduled to accommodate the demands of traffic and shall be performed as rapidly as possible to provide maximum safety and convenience to public traffic.

The placing and compaction of the trench backfill and the preparation and compaction of the subgrade shall be in accordance with the various applicable sections of the WSDOT/APWA Standard Specifications except as modified by these Specifications.

Before the pavement patch is to be constructed the pavement shall be saw cut so that the marginal edges of the patch will form a rectangular shape with straight edges and vertical faces.

Signs, barricades, lights, and other warning devices shall be installed per the requirements of the "Manual on Uniform Traffic Control Devices" and they shall be maintained 24-hours a day until the patching work is completed and ready for traffic.

Compaction of the sub-grade shall be completed prior to the required patching. Subgrade compaction shall be to 95% as determined by one of the following methods:

ASTM D1556	(sand cone method)
ASTM D2167	(rubber balloon method)
ASTM D2922	(nuclear method)

3-14.7(2) CEMENT CONCRETE PAVEMENT

After the crushed surfacing top course sub-grade for the pavement has been constructed and compacted to line and grade, the cement concrete pavement patch shall be placed and struck off to a thickness of one inch greater than the existing pavement or eight inch minimum, whichever is greater. All work shall be in accordance with Section 5-05 of the WSDOT/APWA Standard Specifications, except as modified by these Specifications and Standard Drawing No. 316.

Through joints and dummy joints shall be placed to match existing or as directed by the City Engineer. The surface of the concrete patch shall be finished and brushed with a fiber brush. Approved curing compound shall be placed on the finished concrete immediately after finishing.

3-15 ROCKERIES AND ROCKWALLS

3-15.1 DESCRIPTION

This work shall consist of constructing rockeries with rock facing height of eight feet or less used for erosion control or the containment of cuts and embankments. Work shall be performed in accordance with these Specifications and Standard Plan No. 324. Rockeries over eight feet in height must be designed by a civil engineer licensed in the State of Washington.

3-15.2 MATERIALS

All rock shall be sound, angular ledge rock that is resistant to weathering. The longest dimension of any individual rock should not exceed three times its shortest dimension. Acceptability of rock will be determined by laboratory tests as hereinafter specified, geologic examination and historical usage records. All rock delivered to and incorporated in the project shall meet the following minimum specifications:

A.	Absorption ASTM C127 AASHTO T-85	*Not more than 2.0% for igneous and metamorphic rock types and 3.0% for sedimentary rock types.*
B.	Accelerated Expansion (15 days) CRD-C-148*1, *2	*Not more than 15% breakdown.*
C.	Soundness (MgS04 at 5 cycles) ASTM C88 or CRD-C-137	*Not greater than 5% loss.*
D.	Unconfined Compressive Strength *ASTM D 2938*	*Intact strength of 6,000 psi, or greater.*

E. Bulk Specific Gravity (155pcf) *Greater than 2.48*.
ASTM C127 or AASHTO T-85

*1. The test sample will be prepared and tested in accordance with Corps of Engineers Testing Procedure CRD-C-148, "Method of Testing Stone for Expansive Breakdown on Soaking in Ethylene Glycol".

*2. Accelerated expansion tests should also include analyses of the fractures and veins found in the rock.

The density of the rock shall be equal to or greater than one hundred fifty-five (155) pcf. Typically, rocks used for rock wall construction shall be sized approximately as shown on Standard Plan 324.
Rockery caps will be required on all rockeries higher than four feet in the public right-of-way and optional on private property. The cement concrete cap shall be a minimum of two inches thick. Concrete for rockery cap shall be Class 3000 or Commercial. Lamp black coloring agent to match the color of the rockery shall be added to the cement concrete during mixing in an amount not to exceed 1½ pounds per cubic yard of concrete. Where a pedestrian or ornamental handrail is required, the rockery cap shall be deepened to a minimum of twelve inches for a section six inches either side of each pipe sleeve. Dummy joints shall be constructed at twelve foot intervals. The depth of the dummy joint shall be one-third the depth of the cap.

3-15.3 GENERAL

Surfaces reasonably accessible to pedestrians above and adjacent to rockeries over 30" in height shall be protected by a guardrail conforming to Section 1712 of the Uniform Building Code and to Section 3-16 of these Specifications.

A Public Works permit is required for all rock walls within the public right-of-way and for all those exceeding four
feet in height on private property.

3-15.4 CONSTRUCTION REQUIREMENTS

The first step in rock wall construction, after general excavation, is to construct a keyway of at least twelve inches in depth, extending for the full length of the rock wall. The keyway shall be slightly inclined back towards the face being protected. Once the competency of the keyway subgrade to support the rock wall is verified, a shallow ditch or trench, approximately twelve inches wide and deep, shall be dug along the read edge of the keyway. A four-inch diameter perforated or slotted high-density polyethylene (HDPE) smooth interior pipe shall be placed in the trench. This drain pipe shall be installed with sufficient slope to initiate flow and the outfall connected to a positive and permanent discharge.

The contractor shall have sufficient space available so that he can select from among a number of stockpiled rocks for each space in the rock wall to be filled. Rocks which have shapes which do not match the spaces offered by the previous course of rock should be placed elsewhere to obtain a better fit. Rocks shall be of a generally cubical, tubular, or rectangular shape. Any rocks of basically rounded or tetrahedral form shall be rejected or used for filling large void spaces.

The first course of rock shall be placed on firm unyielding soil. There shall be full contract between the rock and soil, which may require shaping of the ground surface or slamming or dropping the rocks into place

so that the soil foundation conforms to the rock face bearing on it. The bottom of the first course of rock shall be a minimum of twelve inches below the lowest adjacent site grade.

As the rock wall is constructed, the rocks shall be placed so that there are no continuous joint planes in either the vertical or lateral direction. Whenever possible, each rock shall bear on at least two rocks below it. Rocks should be placed so that there is some bearing between flat rock faces rather than on joints. Joints between courses (the top surface or rock) shall slope back towards the cutface and away from the rock wall.

Because of the nature of the product used to construct a rock wall, it is virtually impossible to avoid creating void spaces between individual rocks. Where voids of greater than six inches in dimension exist in the face of a rock wall, they shall be visually examined to determine if contact between the rocks exists within the thickness of the rock wall. If there is no rock contact within the rock wall thickness, the void shall be chinked with a smaller piece of rock.

A rock drainage filter shall be installed between the rear face of the rock wall and the soil face being protected. This drain rock layer shall be at least twelve inches thick. For rock walls eight feet in height or higher, it shall be at least eighteen inches thick. The material for the drainage filter shall be quarry rock, as specified in Section 3-20.7 of these Specifications.

3-16 METAL HAND RAILINGS

3-16.1 DESCRIPTION

This section applies to providing and building metal hand railings that meet the requirements of the Plans, these Specifications and the City Engineer.

3-16.2 MATERIALS

Materials shall meet the requirements of the following:

Ornamental Handrail

Ornamental handrail shall be constructed in accordance with Standard Plan No. 326 and these Specifications. Horizontal rails and vertical support posts shall be 1½ inches by 1½ inches by 1/8 inch tubular steel conforming to ASTM A120. Balusters shall be 1/2 inch by 1/2 inch and the horizontal bottom rail 1-1/2 inches by 1/2 inch by 1/8 inch channel steel (ASTM A120). Vertical support posts shall be a maximum eight feet on center and balusters a maximum four inches clear space. The center of the bottom rail shall be a maximum four inches above finished grade. Finished height of the railing shall be 42 inches above the pedestrian walking surface. Provide slip joints at stairway expansion joints and at 24 feet on center maximum.

Pedestrian Handrail (Galvanized Steel and Aluminum)

Galvanized steel and aluminum pedestrian handrail shall be constructed in accordance with Standard Plan Nos. 325 and 325A and these Specifications. Horizontal rails and vertical support posts shall be 1-1/2 inch diameter Schedule 40 Standard Pipe and balusters shall be 3/4 inch diameter Schedule 40 Standard Pipe. Vertical support posts shall be on eight foot centers and balusters on four inches clear space.

Finished height of the railing shall be 42 inches above the pedestrian walking surface. Provide slip joints at stairway expansion joints and at 24 feet on center maximum.

3-16.3 FABRICATION

Before fabricating the railing, the contractor shall submit six copies of the shop plans for the City Engineer's approval. The contractor may substitute other rail connection details for those shown in the plans if details of these changes show in the shop plans and if the City Engineer approves. In approving shop plans, the City Engineer indicates only that they are adequate and complete enough. Approval does not indicate a check on dimensions.

Welding shall conform to the requirements of the "Structural Welding Code" AWS D1.1 for steel, and to the requirements of the "Specifications for Aluminum Structures" of the Aluminum Association for aluminum alloys. All exposed welds shall be ground flush with adjacent surfaces.

Railing panels shall be straight and true to dimensions. Adjacent railing panels shall align with each other with a variation not to exceed 1/16 inch. Joints shall be match marked.

For structures on curves, either horizontal or vertical, the railing shall conform closely to the curvature of the structure by means of series of short chords. The lengths of the chords shall be the distance center to center of rail posts.

Steel railing units shall be galvanized after fabrication. Zinc used for galvanizing shall be grade Prime Western conforming to ASTM B6 with a minimum two ounces per square foot.

Completed aluminum railing units shall be anodized after fabrication conforming to the requirements of the Aluminum Class 1 Anodic Coating, AA-C22-A41.

Ornamental railing shall be painted with a rust-proof metal primer and one coat of black ornamental iron metal paint.

3-16.4 INSTALLATION

The railing shall be erected in accordance with the plans on anchor bolts, or in holes formed by inserts provided in the concrete railing base to receive the railing posts. Sheet metal inserts shall be removed before the erection of the railing.

No railing shall be erected on the structure until the sidewalk to which it is to be attached is completed and all falsework supporting the system is released.

The railing shall be carefully erected, true to line and grade. Posts and balusters shall be vertical with the direction from the vertical for the full height of the panel not exceeding 1/8 inch.

Slip joints shall be as shown on Standard Drawing Nos. 325, 325A and 326. Railing installed without slip joints will be rejected, and the contractor shall install new railing at his own expense.

3-17 CEMENT CONCRETE SIDEWALKS

3-17.1 DESCRIPTION

This work shall consist of constructing cement concrete sidewalks, thickened edge for sidewalks, curb ramps, and bus shelter pads, including excavation for the depth of the sidewalk and subgrade preparation, in accordance with these Specifications, the WSDOT/APWA Standard Specifications and Standard Drawings Nos. 306, 306A, 310A thru 310C, and 311. Porous concrete sidewalks may be used subject to approval of the City Engineer.

3-17.2 MATERIALS

Materials shall meet the requirements of the following section of the WSDOT/APWA Standard Specifications:

Cement Concrete Class 3000	6-02
Portland Cement	9-01
Aggregates	9-03
Premolded Joint Filler	9-04
Concrete Curing Materials and Admixtures	9-23

Slump of the concrete mix shall not exceed 3-1/2 inches. Lamp black coloring agent for matching the color of newly constructed cement concrete sidewalks to the color of adjacent existing cement concrete sidewalks shall be added to the concrete during mixing in an amount not to exceed 1-1/2 pounds per cubic yard of concrete. No lamp black shall be used in curb ramps.

The use of Calcium Chloride as an admixture is prohibited.

3-17.3 CONSTRUCTION REQUIREMENTS

3-17.3(1) GENERAL

The curb and gutter section shall be placed prior to the placement of the sidewalk section unless otherwise directed by the engineer.

Subgrade shall be approved by the Public Works Inspector prior to concrete being placed. Generally, 1/4 inch V-grooves deep are to be placed on five feet centers, but at the discretion of the inspector, this may be changed to make for a better match with the surrounding area. Expansion joints shall be placed to match those placed in existing curbs if new sidewalk is poured adjacent a curb and gutter, in all other cases the maximum spacing on expansion joints shall be 30 feet center to center. Dummy joints shall be 1/2 inch by 1-1/2 inch on 15 foot centers. Through joints shall be 1/2 inch by four inches.

A minimum distance of three feet is required from the face of curb to any obstruction on or within the sidewalk unless otherwise noted.

It is expected there will be sufficient suitable native material excavated from various portions of the improvement to fill low areas in the sidewalk sub-grade and planting strip area when needed.

Where there is insufficient suitable native material on the project site, the contractor shall furnish, place, and compact gravel borrow. All sidewalks shall be constructed over a minimum two inches of crushed surfacing top course meeting the requirements of Section 3-20.5 of these Specifications and Section 9-03.9(3) of the WSDOT/APWA Standard Specifications compacted to 95% of maximum density.

3-17.3(2) FORMS AND FINE GRADING

Wood forms shall be 2"x4" (nominal) in lengths of not less than ten feet. Steel forms may be used upon approval of the City Engineer. Forms shall be staked to a true line and grade. A sub-grade template shall then be set upon the forms and the fine grading completed so that the sub-grade will be a minimum of 3-5/8 inches below the top of the forms. Forms shall be provided around all street name sign posts and traffic sign posts that are placed in concrete areas. Forms used for this purpose shall be two foot square or two foot minimum diameter cutout, as approved by the City Engineer.

3-17.3(3) PLACING AND FINISHING CONCRETE

The concrete shall be spread uniformly between the forms and thoroughly compacted with a steel shod strike board. Through joints and dummy joints shall be located and constructed in accordance with the Standard Plans. In construction of through joints, the premolded joint filler shall be adequately supported until the concrete is placed on both sides of the joint.

Whenever castings are located in the sidewalk area, joints shall be installed at the casting location to control cracking of the sidewalk. If spacing of joints or scoring is such that installation of joint material would be unsuitable, the contractor shall install rebar to strengthen the sidewalk section.

Dummy joints shall be formed by first cutting a groove in the concrete with a tee bar of a depth equal to, but not greater than the joint filler material, and then working the premolded joint filler into the groove. Premolded joint filler for both through and dummy joints shall be positioned in true alignment at right angles to the line of the sidewalk and be normal to and flush with the surface. Where the sidewalk will be contiguous with the curb, it shall be constructed with a thickened edge as shown on Standard Plan No. 306A.
After the concrete has been thoroughly compacted and leveled, it shall be floated with wood floats and finished at the proper time with a metal float.

The surface shall be brushed with a fiber hair brush of an approved type in a transverse direction except that at driveway and alley crossings it shall be brushed longitudinally. The placing and finishing of all sidewalk shall be performed under the control of the City Engineer, and the tools used shall meet with his approval. After brush finish, the edges of the sidewalk and all joints shall be lightly edged again with an edging tool to give it a finished appearance.

The surface finish and joint pattern may vary at the direction of the City Engineer in order to match existing sidewalk.

3-17.3(4) CURING AND PROTECTION

The curing materials and procedures specified in Section 5-05.3(13) of the WSDOT/APWA Standard Specifications shall prevail, except that white pigment curing compounds shall not be used on sidewalks.

The contractor shall have readily available sufficient protective covering, such as waterproof paper or plastic membrane, to cover the pour of an entire day in event of rain or other unsuitable weather.

The sidewalk shall be protected against damage or defacement of any kind until it has been accepted by the City Engineer. Sidewalk which is not acceptable to the City Engineer because of damage or defacement, shall be removed and replaced by the contractor.

3-17.3(5) CURING AND HOT WEATHER

In periods of low humidity, drying winds, or high temperatures, a fog spray shall be applied to concrete as soon after placement as conditions warrant in order to prevent the formation of shrinkage cracks. The spray shall be continued until conditions permit the application of a liquid curing membrane or other curing media. The City Engineer shall make the decision when the use of a fog spray is necessary.

3-17.3(6) COLD WEATHER WORK

When the air temperature is expected to reach the freezing point during the day or night, the concrete shall be protected from freezing. The contractor shall provide a sufficient supply of straw, hay, grass, earth, blankets, or other suitable blanketing material and spread it over the pavement to a sufficient depth to prevent freezing of the concrete. The contractor shall be responsible for the quality and strength of the concrete thus cured. Any concrete injured by frost action or freezing shall be removed and replaced at the contractor's expense in accordance with these Specifications.

3-17.3(7) THROUGH AND CONTRACTION JOINTS

Standard locations for through joints for sidewalks are:

a) At street margins produced and at 30 foot intervals.

b) To separate concrete driveways, stairways, curb ramps and their landings from sidewalks.

c) Around the vertical barrel of fire hydrants, around utility poles, and large diameter underground utility cover castings when located in the sidewalk area.

d) Longitudinally between concrete walks, curbs, paved planting strips, and solid masonry or concrete walls where they abut.

e) To match as nearly as possible, the through joints in the adjacent pavement and curb when sidewalk abuts curb.

Transverse contraction joints (dummy joints) shall be constructed with premolded material 1/2 inch wide by 2 inches depth, and set at 15 foot intervals, or as decided by the engineer. At no time will dummy joint spacing exceed 15 feet.

Transverse and longitudinal through joints as shown on Standard Plan No. 307 shall be 1/2 inch thickness premolded non-extruding joint material, cut to a width equal to the full depth of the concrete where located, plus 1/2 inch. When installed, they shall be placed with top edge 1/8 inch below the finished surface of the

concrete, in a perpendicular plane to the surface and with the bottom edge embedded in the subgrade. All joints shall be in straight alignment, except where placed in curved locations.

Construction joints for sidewalks shall conform to the applicable requirements for through joints. The top edge shall be 1/8 inch below the finished surface of the sidewalk. At no time will joint spacing exceed 15 feet.

3-17.3(8) CURB RAMPS

In accordance with State law and the American Disability Act Agency Guidelines, curb ramps shall be provided at all pedestrian crossings with curb sections. It is required that when a ramp is constructed giving handicap access to the roadway area, the corresponding ramp at the opposite side of the roadway will also be required. Exact locations at each curb return will be approved in the field during construction.

Curb ramps shall be constructed in accordance with the Standard Plan Nos. 310, 310A, 310B, 310C, and 311. Curb ramps shall be constructed where shown on the plans or as directed by the City Engineer. This work shall include curb ramps installed in new sidewalks and curb ramps to be installed in existing sidewalks. Existing sidewalks shall be neatly saw-cut full depth prior to construction of curb ramps.

Curb ramps shall be constructed separately from the sidewalk to produce a definite break line between the ramp and the sidewalk. A 1/2 inch non-extruded through joint material shall be installed between the curb ramp and the sidewalk with edging.

Ramp texturing is to be done with broom finish. Truncated dome warning devices shall be installed 6” from the curb, 24” deep and painted “safety yellow” per ADAAG 2.9.2, current version and as shown on the above standard plans.

Curb ramps will not be poured integral with sidewalk and shall be isolated by expansion joint material on all sides, but not at end of ramp adjacent to the roadway.

3-18 CURB AND GUTTER

3-18.1 DESCRIPTION

The standard curb and gutter section used in Snohomish shall by Type A-1 per Standard Plan No. 305A. No new curb and gutter is to be placed until forms have been checked and approved for line, grade, and compaction by the Public Works Inspector. Curb cuts or "invisible" curbs may be used subject to approval of the City Engineer.

3-18.2 MATERIALS

Materials shall meet the requirements of the following Sections of the WSDOT/APWA Standard Specifications:

Portland Cement	9-01
Concrete Aggregate	9-03
Reinforcing Steel	9-07
Premolded Joint Filler	9-04
Curing Compounds	9-23

The Portland Cement Concrete shall meet the requirements of Section 5-05 of the WSDOT/APWA Standard Specifications. Concrete mix for curbs shall be Class 3000. Slump of the concrete shall not exceed 3 1/2 inches.

All new curb and gutter shall be placed over not less than two inches of crushed surfacing top course compacted to 95% maximum density.

Forms may be of wood or metal at the option of the contractor, provided that the forms as set will result in a curb, or curb and gutter of the specified thickness, cross section, grade, and alignment shown on the drawings and Standard Plan No. 305A.

3-18.3 PLACING CONCRETE

The subgrade shall be properly compacted and brought to specified grade before placing concrete. The subgrade shall be thoroughly dampened immediately prior to the placement of concrete. Concrete shall be spaded and tamped thoroughly into the forms to provide a dense, compacted concrete free of rock pockets. The exposed surfaces shall be floated, finished, and brushed longitudinally with a fiber hair brush approved by the City Engineer.

The rate of concrete placement shall not exceed the rate at which the various placing and finishing operations can be performed in accordance with these Specifications.

If concrete is to be placed by the extruded method, the contractor shall demonstrate to the satisfaction of the City Engineer that the machine is capable of placing a dense, uniformly compacted concrete to exact section, line, and grade.

3-18.4 CURING

Transparent curing compounds shall be applied to all exposed surfaces immediately after finishing. Transparent curing compounds shall contain a color dye of sufficient strength to render the film distinctly visible on the concrete for a minimum period of four hours after application.

The contractor shall have readily available sufficient protective covering, such as waterproof paper or plastic membrane, to cover the pour of an entire day in event of rain or other unsuitable weather.

Additional requirements for curing in hot weather shall be as specified in Section 3-17.8 of these Specifications. Additional requirements for curing in cold weather may be found in Section 3-17.9 of these Specifications.

3-19 CEMENT CONCRETE DRIVEWAY

3-19.1 DESCRIPTION

This work shall consist of cement concrete driveway and alley returns constructed at the locations shown on the drawings and where directed by the City Engineer, and shall be in accordance with these Specifications, the WSDOT/APWA Standard Specifications and Standard Plan Nos. 307, 308, and 309.

Type 1 driveways should only be used where there is likely to be limited storm water runoff in the gutter line or adequate drainage facilities exist to prevent street storm water from flowing onto adjacent properties.

3-19.2 MATERIALS

Materials shall meet the requirements of the following sections of WSDOT/APWA Standard Specifications:

Portland Cement	9-01
Fine Aggregate	9-03
Coarse Aggregate	9-03
Joint Materials	9-04
Curing and Admixtures	9-23

The concrete mix shall be as specified for Class 3000 and the slump of the concrete shall not exceed three inches. Porous asphalt or porous concrete satisfying the requirements of the adopted Stormwater Management Manual may be used subject to approval of the City Engineer.

A minimum of two inches of crushed surfacing top course shall be compacted to 95% maximum density prior to any placement of concrete.

3-19.3 CONSTRUCTION REQUIREMENTS

3-19.3(1) GENERAL

No driveway approach shall project beyond the extension of the side property line to the curb, unless the owner of the adjacent property is a co-signer of the driveway permit.

There must be at least 20 feet of full height curb between driveways serving any one property frontage.

There must be at least 6 feet of full height curb between driveways on adjacent lots.

Driveway aprons shall be constructed per Standard Plan Nos. 307, 308, or 309 as applicable. The minimum thickness of the driveway apron shall be six inches, placed over a minimum of two inches of crushed surfacing top course compacted to 95% maximum density over a compacted sub-grade. In all cases, subgrade and rock grade shall be approved by the Public Works Inspector prior to concrete being placed. Driveway aprons over 15 feet wide shall have an expansion joint placed in the center of the apron.

In locations where a new driveway is to be constructed and sidewalk and curb and gutter is already existing, it must be totally removed and replaced to driveway standards. It is not permissible to "knock-off" existing curb and install driveway apron, the total curb and gutter section must be removed, either by saw cutting or to the nearest expansion joint, and replaced to driveway standards.

New driveways installed in areas where curb and gutter improvements are not existing, and not required to be installed, shall be paved from the existing edge of pavement to the property line regardless of whether the remainder of the driveway on the private property is paved.

In areas not fully improved with curbs and sidewalks, the elevation of the driveway at the point where it crosses the property line shall not be more than 3 inches higher than the elevation of the centerline of the

existing paved street if the driveway is rising on the private property side and no lower than level with the elevation of the centerline of the existing street if the driveway is going down on the private property side.

3-19.3(2) DRIVEWAY LOCATION

Whenever possible, developments which have frontage on more than one roadway will locate the driveway on the lowest classified roadway, considering sight distance and separation from roadway intersections.

Access to corner lots shall be located on the minor street whenever possible and as close as practicable to the property line most distant from the intersection.

Driveways should be placed directly opposite from each other whenever possible. (More details on this in the county document.)

When allowed, driveways located closer than 100 feet from the approach to an arterial intersection shall be signed and marked "Right Turn Only" unless otherwise approved by the City Engineer.

The City Engineer shall have the authority to restrict the number, size, and location of access driveways. In general, driveways will not be allowed closer than 50 feet to the intersection in residential streets and 100 feet on arterials. The distance of measurement is from the intersection of the straight lines formed by the extension of the curb lines.

3-19.3(3) DRIVEWAY SEPARATION OR SPACING

The desirable driveway spacing for arterial streets is 200 feet or more. The following table shows minimum acceptable driveway spacing.

Roadway Speed(1) (in mph)	Min. Separation(2) Arterial(in feet)	Local
25	105	35
30	125	40
35	150	45
40	185	50
45	230	50
50	275	50

(1) Refers to posted speed.
(2) Between two-way driveways. Distances between adjacent, one-way driveways (with the inbound drive upstream) can be one-half the distances shown above.

3-19.3(4) FREQUENCY OF DRIVEWAYS

The allowable number of driveways for a development is determined based on the following criteria:

- Noncommercial developments receive a maximum of one driveway per lot. The City Engineer may consider requests for more than one driveway based on the following criteria:
  a. The lot is not a corner lot;
  b. No intersection is within 75 feet;

c. The extra access will not cause parking or other complications for the lot or neighboring one; and
d. The lot is located on a local access street with low traffic volume (generally less than 300 vehicles per day);

- Commercial developments receive one driveway per 500 feet of total property frontage, unless approved otherwise by the City Engineer.
- For additional driveways information see County document.

3-19.3(5) DRIVEWAY DESIGN CONSIDERATIONS

The following topics shall be considered when designing new driveways or modifying existing ones and are addressed in detail in the Snohomish County Manual of Standards and Guidelines for Access Management.

A. Location of Bus Pullouts.
B. Entrance Geometrics
   1. Width and Curb Radius
   2. Horizontal Alignment (angle and skew)
   3. Direction (one-way or two-way)
   4. Sight Distance
   5. Channelization
   6. Acceleration and Deceleration Lanes and Tapers.
C. Internal Circulation
   1. Joint Driveways
   2. Exiting Storage
   3. Connecting Roadways and Vehicle Aisles
   4. Parking Coordination
D. On-Street Left Turn Storage
   1. Median Treatment Warrants
   2. Median Structures
   3. Median Barrier Openings
E. Vehicle Guidance
   1. Driveway Curb Marking
   2. Pavement Markings
   3. Signs

Driveway approaches shall be constructed of Portland cement unless otherwise authorized by the City Engineer.

No driveway approach shall project beyond the extension of the side property line to the curb, unless the owner of the adjacent property is a co-signer of the driveway permit.

There must be at least 20 feet of full height curb between driveways serving any one property frontage.

There must be at least 6 feet of full height curb between driveways on adjacent lots.

Egress and ingress shall be from an alley where reasonable. All driveways for commercial purposes must provide sufficient space for vehicles, twenty feet in length to turn around before returning to the

street, unless an exit to an alley or secondary street is provided. In critical on-street parking areas, additional off-street parking space(s) are required for the on-street spaces eliminated by any driveway(s).

3-19.3(6) COMMERCIAL DRIVEWAYS

When allowed, driveways located closer than 100 feet from the approach to an arterial intersection shall be signed and marked "Right Turn Only" unless otherwise approved by the City Traffic Engineer.

A. Commercial Driveway Width:

Street Posted Speed MPH	Driveway Max Width* feet
25	30
26-45	35
Over 45	40

*Dimension "1" on Standard Plan Nos., 307, 308, and 309.

The minimum width of driveway shall be 20 feet.

B. Grade:

The maximum recommended grade is 8%. Vertical curves should be used for smooth transitions at significant grade differentials.

3-19.3(7) RESIDENTIAL DRIVEWAYS

A. **Width:** The maximum width shall be 20 feet at dimension "1" on Standard Plan Nos. 307, 308, & 309. The minimum width shall be 8 feet per SMC 14.235.130(B).

B. **Grade:** The maximum recommended grade is 15%. Grade changes that exceed 16% shall require vertical curves to connect tangents.

3-19.3(8) INTERSECTION TYPE CRITERIA

Private intersection-type driveway openings will be considered in lieu of conventional driveways in commercial areas where the criteria A through D below are met. Meeting the criteria is not a guarantee that an intersection-type driveway will be allowed.

A. Projected driveway usage is greater than 1,000 vehicles per day.
B. The opening is at least 160 feet from any other intersection.
C. The opening is at least 160 feet from any other driveway on the property frontage under control of the applicant.
D. A minimum 100 feet storage area is provided between the curb line on the street and any turning or parking maneuvers within the development.

3-19.3(9) EXCAVATION AND SUBGRADE

Where directed by the City Engineer, unsuitable material in the sub-grade shall be removed to a specific depth and backfilled with select material such as gravel borrow conforming to Section 3-20.2 of these Specifications.

Before any concrete is placed, the contractor shall bring the sub-grade to the required line, grade, and cross-section. The contractor shall maintain the sub-grade in the required condition until the concrete is placed. Compaction shall be to 95% standard density.

3-19.3(10) FORMS AND FINE GRADING

Forms for the straight sections of the driveway or alley return shall have a minimum thickness of two inches and be equal to the nominal depth of the concrete. Plywood or one inch lumber may be used on radii. All forms shall be securely staked and blocked to true line and grade.

A template shall be set upon the forms and the sub-grade shall be fine graded to conform to the required section. The sub-grade shall then be compacted to the approval of the City Engineer. Prior to placement of the concrete, the sub-grade shall be thoroughly dampened.

3-19.3(11) PLACING AND FINISHING

The concrete shall be spread uniformly between the forms and thoroughly compacted with an approved type of strike board. Through joints and contraction joints shall be located and constructed in accordance with the Standard Plans. In the construction of through joints, the premolded joint filler shall be adequately supported until the concrete is placed on both sides of the joint.

Contraction joints (dummy joints) shall be formed with a tee bar by first cutting a groove in the concrete to a depth equal to, but not greater than the joint filler material and then working the premolded joint filler into the groove. Premolded joint filler for both through and dummy joints shall be positioned in true alignment and at right angles to the center line of the driveway or alley return.

After the concrete has been thoroughly compacted and leveled, it shall be floated with wood floats and finished at the proper time with a metal float. Joints shall be edged with 1/4 inch radius edger and the driveway or alley return edges shall be tooled with 1/2 inch radius edger.

The surface shall be brushed in a transverse direction in relation to the center line of the driveway or alley return with a fiber hair brush of approved type.

3-19.3(12) CURING AND PROTECTION

The curing materials and procedures specified in Sections 5-05 and 9-23 of the WSDOT/APWA Standard Specifications and Section 3-17.7 of these Specifications shall be used. The driveway and the alley return shall be protected against damage or defacement of any kind until acceptance by the owner. Any driveway or alley return not acceptable, in the opinion of the City Engineer because of damage or defacement, shall be removed and be replaced by the contractor.

Before placing any concrete, the contractor shall have on the job site enough protective paper to cover the pour of an entire day, in event of rain or other unsuitable weather conditions.

3-20 PROPORTIONING OF MATERIALS

3-20.1 CONTROLLED DENSITY FILL (CDF)

CDF shall conform to the following specifications:

1. Portland Cement: Type I-II ASSHTO M85.

2. Mineral Filler Admixtures: pozzolans or fly ash (ASTM C-618, Class F).

3. Aggregate: Snohomish Washed Coarse Sand No. 2.

CDF shall be used in the following proportions for 1 cubic yard. Batch weights may vary depending on specific weights of aggregates.

Portland Cement	50 lbs/yd^3
Fly Ash	250 lbs/yd^3
Everett No. 2 Washed Coarse Sand(SSD)	3,200 lbs/yd^3
Water 50 gals/yd^3 (Max)	

Add sufficient water to provide a 6 inch to 8 inch slump delivered in place at the job site.

3-20.2 GRAVEL BORROW

The gradation for Gravel Borrow in Section 9-03.14 of the WSDOT/APWA Standard Specifications is superseded by the following:

U.S. Standard Sieve Size	Percent Passing By Dry Weight
3 inch 100	
1-1/4 inch	80-100
No. 4 20-70	
No. 40 0-25	
No. 200	0-5
Sand Equivalent	50 Min.

3-20.3 EVERETT NO. 2 WASHED COARSE SAND

Everett No. 2 Washed Coarse Sand shall be a clean mixture free from organic matter and conforming to the following gradation:

U.S. Standard Sieve Size	Percent Passing By Weight
1/2 inch	100
#4	65-100
#50	0-10
#200	0-3

All percentages are by weight.

3-20.4 SPAWNING GRAVEL

Spawning Gravel shall be clean, well-rounded, uniformly graded, and shall conform to the following gradation:

Sieve Size	Percent Passing
4" Square	100
3" Square	85 - 95
1-1/2" Square	65 - 75
1/2" Square	0 - 50
1/4" Square	2 Max.

All percentages are by weight.

3-20.5 CRUSHED SURFACING

Crushed Surfacing Top Course and Crushed Surfacing Base Course shall meet the requirements of Section 9-03.9(3) of the WSDOT/APWA Standard Specifications including the grading and quality shown.

	Percent Passing	
Sieve Size	Base Course	Top Course
1-1/4" Square	100	
5/8" Square	50 - 80	100
1/4" Square	30 - 50	55 - 75
U.S. No. 40	3 - 18	8 - 24
U.S. No. 200	7.5 Max.	10.0 Max.
% Fracture	75 Min.	75 Min.
Sand Equivalent	40 Min.	40 Min.

All percentages are by weight.

The fracture requirements shall be at least one fractured face and will apply to material retained on each sieve size U.S. No. 10 and above if that sieve retains more than 5% of the total sample.

The portion of Crushed Surfacing retained on a 1/4 inch square sieve shall not contain more than 0.15% wood waste.

3-20.6 FOUNDATION MATERIAL CLASS A

Foundation Material Class A shall meet the requirements of Section 9-03.7 of the WSDOT/APWA Standard Specifications as shown herein:

Sieve Size	Percent Passing
2-1/2" Square	98 - 100
2" Square	92 - 100
1-1/2" Square	72 - 87
1-1/4" Square	58 - 75
3/4" Square	27 - 47
3/8" Square	3 - 14
U.S. No. 4	0 - 1

All percentages are by weight.

3-20.7 QUARRY ROCK

Quarry Rock shall meet the following requirements:

U.S. Standard Sieve Size	Percent Passing By Weight
4"	100
2"	40 maximum
3/4"	10 maximum

All percentages are by weight.

3-20.8 NON-SHRINK CEMENT SAND GROUT

Non-shrink cement sand grout shall be proportioned as follows:

One part high early strength (H.E.S.) cement.
Two parts clean fine-grained sand by weight and well-mixed with sufficient water to obtain a stiff consistency.

Unpolished aluminum powder shall be added to the dry cement in the proportion of one heaping teaspoonful per sack of cement no more than 30-minutes before the grout mixture reaches its final in-place position.

The required strength of the non-shrink concrete or grout shall be fc=4,000 psi and be verified by the cube strength test. The strength shall be confirmed by schmidt hammering of the pads.

Prior to placing the grout, the contact surface shall be thoroughly cleaned, roughened and wetted with water. The grout shall be covered with burlap sacks after the initial concrete set and wetted at regular intervals until the required strength is obtained.

3-20.9 NO. 2 COARSE AGGREGATE

No. 2 Coarse Aggregate shall conform to the following grading [Section 9-3.1(3)C of the WSDOT/APWA Standard Specifications]:

Sieve Size	Percent Passing Minimum	Percent Passing Maximum
1 1/2" Square	100	---
1 1/4" Square	95	100
1" Square	---	---
3/4" Square	40	70
1/2" Square	---	---
3/8" Square	5	20
U.S. No. 4	0	2
U.S. No. 200	0	0.5

DRAWING INDEX

STREETS AND RELATED WORK		Last Revision Date
300	Roadway Functional Classifications	4-01-04
301	Typical Roadway Section-Arterials	4-01-04
301a	Bickford Avenue Roadway Section1	4-01-04
301b	Bickford Avenue Roadway Section2	4-01-04
301c	Bickford Avenue Roadway Section3	4-01-04
302	Typical Roadway Section-Local Access Streets	4-01-04
303	Typical Roadway Section-Alley	4-01-04
304	Typical Cul-de-Sac	4-01-04
305A	Cement Concrete Curb And Gutter, Type "A"	4-01-04
305B	Cement Concrete Rolled Curb And Gutter	4-01-04
305C	Cement Concrete Curb-Type E-1, E-2, E-3, And E-4	4-01-04
305D	Extruded Asphalt Concrete Section	4-01-04
305E	Extruded Cement Concrete Curb	4-01-04
306	Cement Concrete Sidewalk Detail	4-01-04
307	Cement Concrete Driveway Type-1	4-01-04
308	Cement Concrete Driveway Type-2	4-01-04
309	Cement Concrete Driveway Type-3	4-01-04
310a	Type A Curb Ramp	4-01-04
310b	Type B Curb Ramp	4-01-04
310c	Type C Curb Ramp	4-01-04
310d	Type D Curb Ramp	4-01-04
311	Typical Curb Ramp Locations	4-01-04
312	Access Grade Points	4-01-04
313	Survey Monument	4-01-04
314	Survey Control Monument	4-01-04
315	Survey Control Monument 3" Brass Disc	4-01-04
316	Pavement Patching Details	4-01-04
319	Residential Sidewalk Drain	4-01-04
320	Mailbox Structure Installation	4-01-04
320a	Mailbox Structure, For One or Two Boxes	4-01-04
321a	NDCBU Mailbox Cluster	4-01-04
321b	Cluster Mailbox Units Front Opening Only	4-01-04
322	Typical Utility Locations	4-01-04
323	Temporary Turnarounds	4-01-04
324a	Rockery (Design & Construction Requirements)	4-01-04
324b	Rockery (Placement & Post Construction Limits).	4-01-04
325	Pedestrian Handrail	4-01-04
326	Ornamental Handrail	4-01-04
327	Typical Roadway Section Special Interim Street	4-01-04
328	Cement Concrete Stairway Construction Details	4-01-04

329 Typical Lane Reduction Transition 4-01-04
330 Stop Bars.....4-01-04
333 Typical Tree Planting.....4-01-04
334 Street Sign.....12-20-18
335 Street Sign Post.....11-05-18
336 Street Sign Support 11-05-18

PUBLIC STREET CLASSIFICATION	SHORT SUBDIVISION ACCESS (2)	LOCAL ACCESS "A"	LOCAL ACCESS "B"	COLLECTOR ARTERIAL	MINOR ARTERIAL	PRINCIPAL ARTERIAL
	Detached single family, duplex, tri-plex, and four-plex residential.					
Maximum Number of dwelling units serviced (3)	9	40	100	OVER 100	N.A	N.A
Minimum R.O.W	40'	50' (6)	50' (6)	60'	60'	80'
Minimum Pavement Width Curb to Curb	24' (4)	28' (4)	32' (4)	36'	44'	48'
Sidewalks (5)	1 to 4 D.U.-OPTIONAL 5 to 9 D.U.-REQUIRED	Required	Required	Required	Required	Required
Geometrics & Structural Section	Std. Plan # 302	St. Plan # 302	St. Plan # 302	St. Plan # 301	St. Plan # 301	St. Plan # 301
Max. Allowable Grade ***(%) (1)	15%	15%	15%	12%	9%	8%
Utility Easement Beyond R.O.W Req'd	10' Each Side of Public R.O.W.			As Required By City Engineer		

NOTES:

(1) Maximum grade may be exceeded subject to approval by the City Engineer, such approval may be conditional upon the following:

a) No practical alternative exists.
b) Any grade over 15% will be review by the city on a case by case basis.

(2) Can only be used on short plats and cannot be part of a larger development. Must be a permanent dead end.

(3) Maximum potential number of dwelling units served, will include FORECASTED future development of adjacent areas.

(4) 36' wide street section required if less than four(4) off-street parking spaces provided per dwelling unit.
One (1) driveway allowed per lot on "access" streets.

(5) City Engineer may allow sidewalk on one side only in areas of extensive cuts and/or fills and if projected pedestrian volumes are less than normal.

(6) City Engineer may allow variance per Section 1.9

SNOHOMISH WASHINGTON

ROADWAY FUNCTIONAL CLASSIFICATIONS

Approved By:
City Engineer
Date: May 30, 2004

300
Number

City of Snohomish Public Works Department

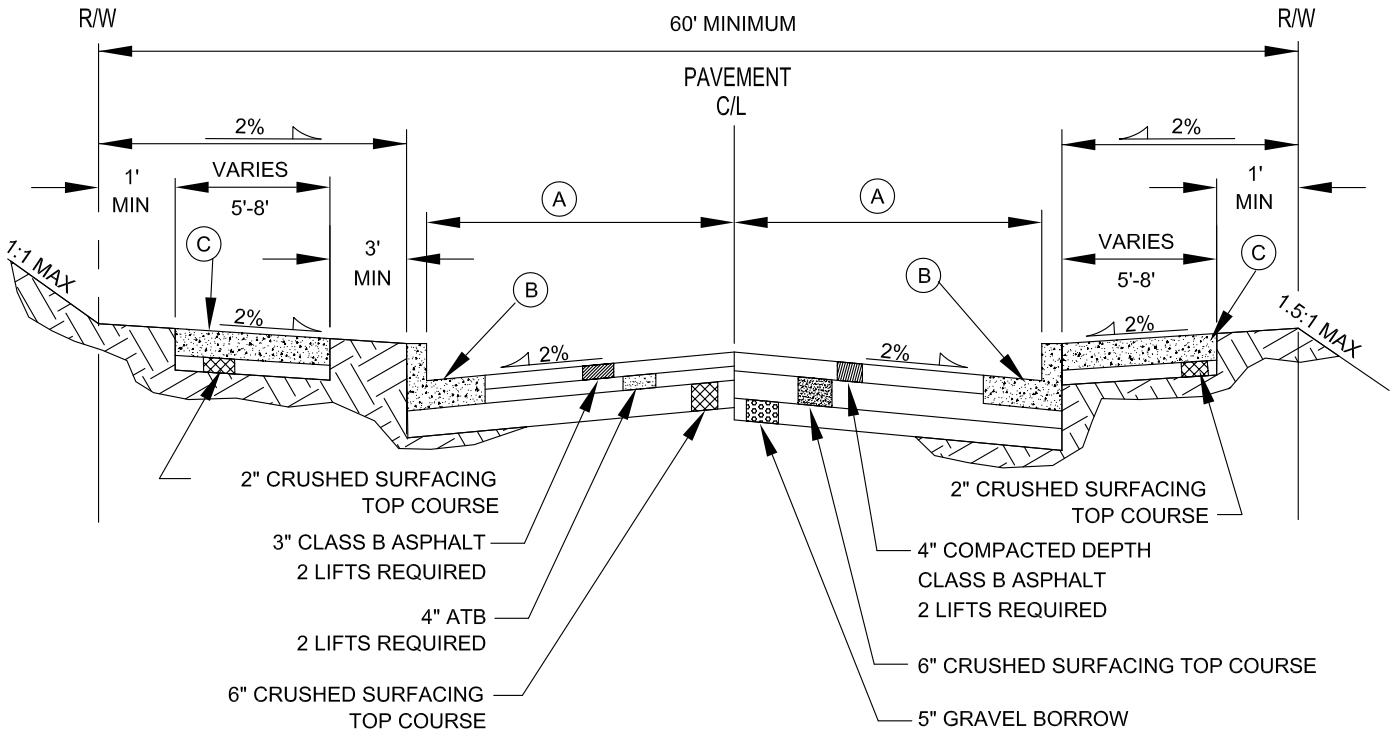

ALTERNATE ROADWAY SECTION

STANDARD ROADWAY SECTION

(A) PAVEMENT WIDTH

COLLECTOR ARTERIAL = 18'
MINOR ARTERIAL = 22'
PRINCIPAL ARTERIAL = 24+'

(B) CONCRETE CURB AND GUTTER TYPE A-1
SEE STD DWG 305A

(C) CEMENT CONCRETE SIDEWALK
SEE STD DWG 306

NOTES

IN WIDENING AREAS, THE EXISTING PAVEMENT EDGE SHALL BE SAW-CUT TO LEAVE A JOIN POINT. ANY TRAFFIC STRIPING REMOVED OR DAMAGED DURING WIDENING WORK SHALL BE REPLACED IN KIND OR AS DIRECTED BY THE CITY ENGINEER.

COMPACTION TESTS ON SUBGRADE AND TOP OF ROCK WILL BE REQUIRED. THE NUMBER OF TESTS SHALL BE AT THE DISCRETION OF THE CITY INSPECTOR. ALL TESTING SHALL BE THROUGH A LICENSED TESTING LABORATORY. THE MINIMUM COMPACTION SHALL BE 95% OF MAXIMUM DENSITY ON BOTH SUBGRADE AND TOP OF ROCK.

ADJUSTMENT OF CATCH BASIN LIDS OR GRATES, MONUMENTS CASES, VALVE BOXES, ETC SHALL BE THE RESPONSIBILITY OF THE CONTRACTOR OR DEVELOPER.

ROADWAY SECTION MAY BE ADJUSTED WITH THE APPROVAL OF THE CITY ENGINEER UPON SUBMISSION OF SUBSTANTIATING ENGINEERING DATA (CBR, ETC) TO SUPPORT THE ADJUSTMENT. FOR DESIGN PURPOSES, THE MINIMUM THICKNESS OF CLASS B ASPHALT SHALL BE 3" COMPACTED DEPTH. COMPACTION SHALL BE AN AVERAGE OF 91% OF RICE DENSITY.

SNOHOMISH WASHINGTON	**TYPICAL ROADWAY SECTION ARTERIALS**	Approved By: City Engineer Date: May 30, 2004	**301** Number
	City of Snohomish Public Works Department		

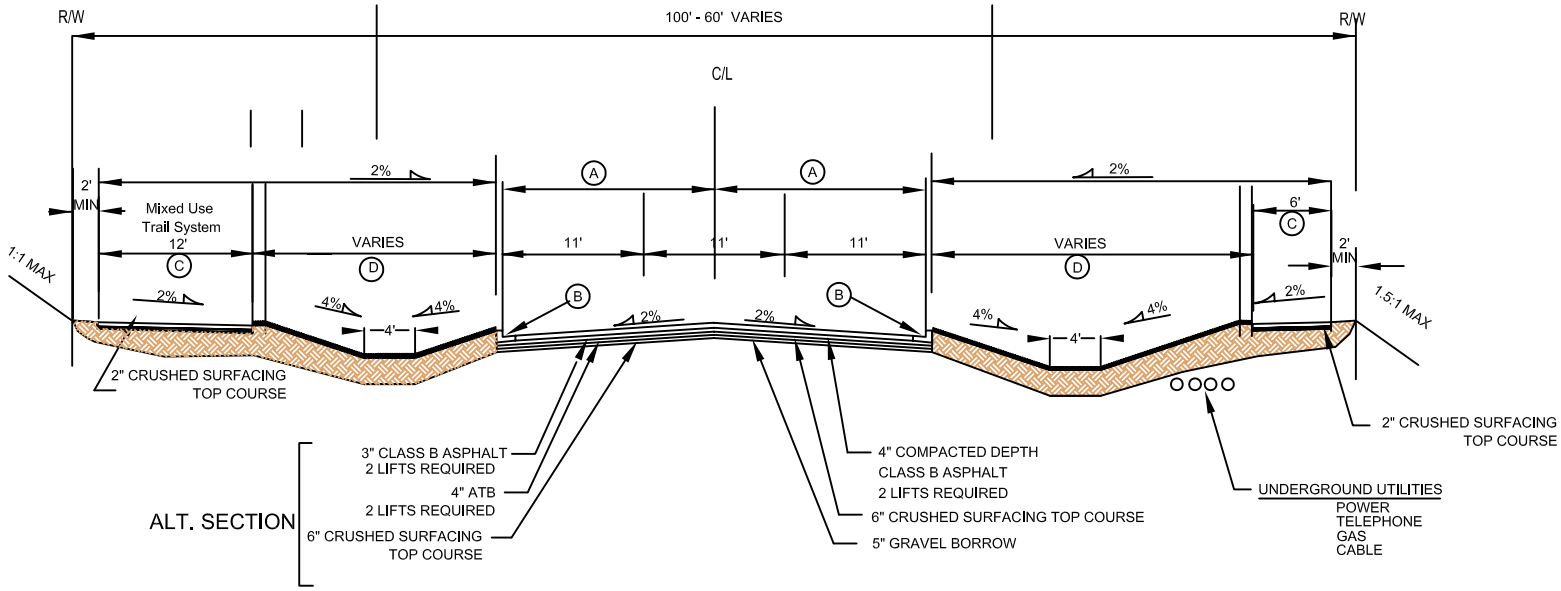

BICKFORD AVENUE STANDARD ROADWAY SECTION 1
FACING NORTH

0 5 10

(A) PAVEMENT WIDTH - 16.5'
TRAVELED LANE WIDTH - 11'
CENTER TURN LANE WIDTH - 11'

(B) CONCRETE CURB AND GUTTER TYPE A-1
SEE STD DWG 305A

(C) CEMENT CONCRETE SIDEWALK
SEE STD DWG 306

(D) GRASS SWALED CLEANSING AND INFILTRATION
DRAINAGE AREA

NOTES

IN WIDENING AREAS, THE EXISTING PAVEMENT EDGE SHALL BE SAW-CUT TO LEAVE A JOIN POINT.

ANY TRAFFIC STRIPING REMOVED OR DAMAGED DURING WIDENING WORK SHALL BE REPLACED IN KIND OR AS DIRECTED BY THE CITY ENGINEER.

COMPACTION TESTS ON SUBGRADE AND TOP OF ROCK WILL BE REQUIRED. THE NUMBER OF TESTS SHALL BE AT THE DISCRETION OF THE CITY INSPECTOR. ALL TESTING SHALL BE THROUGH A LICENSED TESTING LABORATORY. THE MINIMUM COMPACTION SHALL BE 95% OF MAXIMUM DENSITY ON BOTH SUBGRADE AND TOP OF ROCK.

ADJUSTMENT OF CATCH BASIN LIDS OR GRATES, MONUMENTS CASES, VALVE BOXES, ETC SHALL BE THE RESPONSIBILITY OF THE CONTRACTOR OR DEVELOPER.

ROADWAY SECTION MAY BE ADJUSTED WITH THE APPROVAL OF THE CITY ENGINEER UPON SUBMISSION OF SUBSTANTIATING ENGINEERING DATA (CBR, ETC) TO SUPPORT THE ADJUSTMENT. FOR DESIGN PURPOSES, THE MINIMUM THICKNESS OF CLASS B ASPHALT SHALL BE 3" COMPACTED DEPTH.

ALL UTIITIES SHALL BE UNDERGROUND AS PART OF DEVELOPMENT FRONTAGE IMPROVEMENTS

SNOHOMISH WASHINGTON

Bickford Avenue Roadway Section 1

Approved By:
City Engineer
Date: May 30, 2004

301a
Number

City of Snohomish Public Works Department

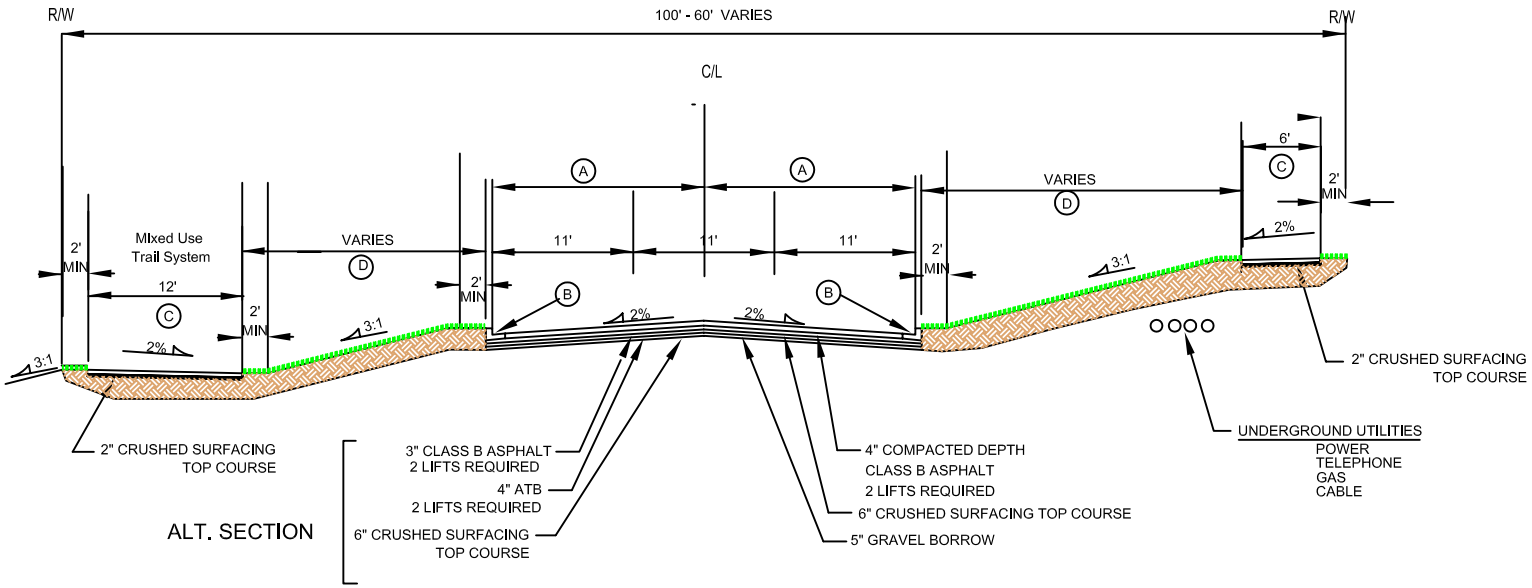

BICKFORD AVENUE STANDARD ROADWAY SECTION 2

FACING NORTH

0 5 10

(A) PAVEMENT WIDTH - 16.5'
TRAVELED LANE WIDTH - 11'
CENTER TURN LANE WIDTH - 11'

(B) CONCRETE CURB AND GUTTER TYPE A-1
SEE STD DWG 305A

(C) CEMENT CONCRETE SIDEWALK
SEE STD DWG 306

(D) GRASS SWALED CLEANSING AND INFILTRATION
DRAINAGE AREA

NOTES

IN WIDENING AREAS, THE EXISTING PAVEMENT EDGE SHALL BE SAW-CUT TO LEAVE A JOIN POINT. ANY TRAFFIC STRIPING REMOVED OR DAMAGED DURING WIDENING WORK SHALL BE REPLACED IN KIND OR AS DIRECTED BY THE CITY ENGINEER.

COMPACTION TESTS ON SUBGRADE AND TOP OF ROCK WILL BE REQUIRED. THE NUMBER OF TESTS SHALL BE AT THE DISCRETION OF THE CITY INSPECTOR. ALL TESTING SHALL BE THROUGH A LICENSED TESTING LABORATORY. THE MINIMUM COMPACTION SHALL BE 95% OF MAXIMUM DENSITY ON BOTH SUBGRADE AND TOP OF ROCK.

ADJUSTMENT OF CATCH BASIN LIDS OR GRATES, MONUMENTS CASES, VALVE BOXES, ETC SHALL BE THE RESPONSIBILITY OF THE CONTRACTOR OR DEVELOPER.

ROADWAY SECTION MAY BE ADJUSTED WITH THE APPROVAL OF THE CITY ENGINEER UPON SUBMISSION OF SUBSTANTIATING ENGINEERING DATA (CBR, ETC) TO SUPPORT THE ADJUSTMENT. FOR DESIGN PURPOSES, THE MINIMUM THICKNESS OF CLASS B ASPHALT SHALL BE 3" COMPACTED DEPTH.

ALL UTIITIES SHALL BE UNDERGROUND AS PART OF DEVELOPMENT FRONTAGE IMPROVEMENTS

SNOHOMISH WASHINGTON

Bickford Avenue Roadway Section 2

Approved By:
City Engineer
Date: May 30, 2004

301b
Number

City of Snohomish Public Works Department

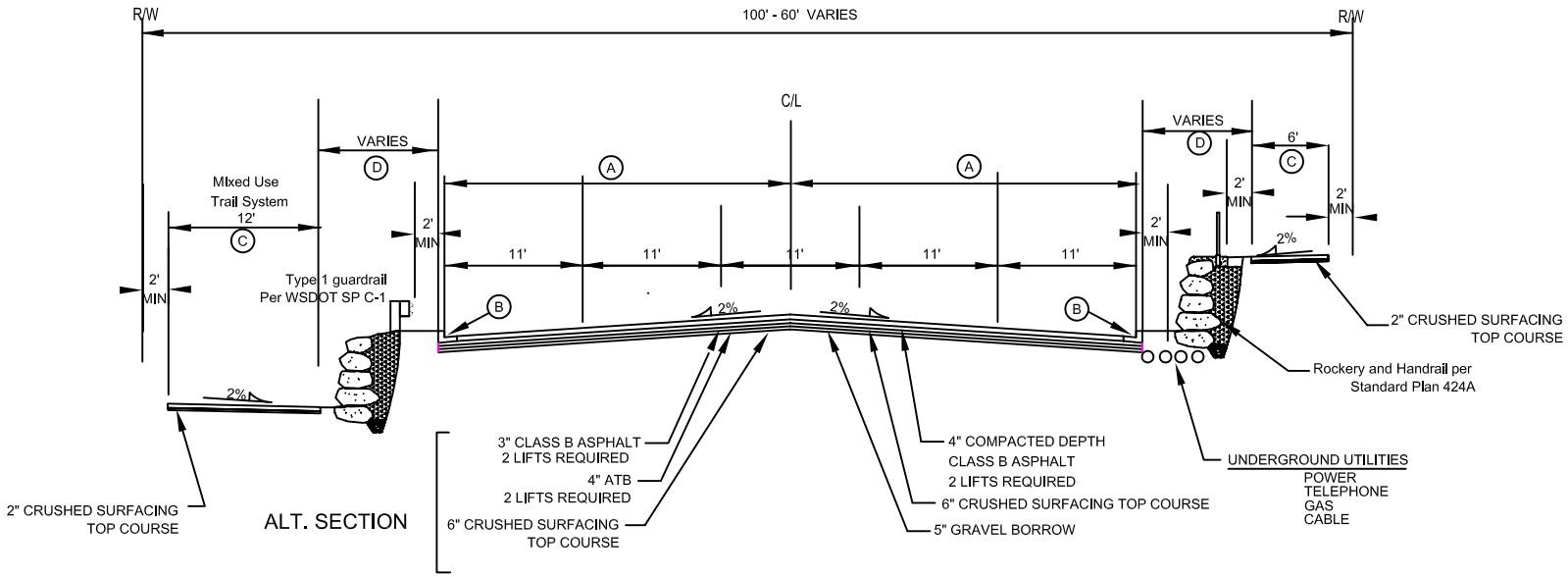

BICKFORD AVENUE STANDARD ROADWAY SECTION 3

FACING NORTH

0 5 10

(A) PAVEMENT WIDTH - 27.5'
TRAVELED LANE WIDTH - 11'
CENTER TURN LANE WIDTH - 11'

(B) CONCRETE CURB AND GUTTER TYPE A-1
SEE STD DWG 305A

(C) CEMENT CONCRETE SIDEWALK
SEE STD DWG 306

(D) GRASS SWALED CLEANSING AND INFILTRATION
DRAINAGE AREA

NOTES

IN WIDENING AREAS, THE EXISTING PAVEMENT EDGE SHALL BE SAW-CUT TO LEAVE A JOIN POINT. ANY TRAFFIC STRIPING REMOVED OR DAMAGED DURING WIDENING WORK SHALL BE REPLACED IN KIND OR AS DIRECTED BY THE CITY ENGINEER.

COMPACTION TESTS ON SUBGRADE AND TOP OF ROCK WILL BE REQUIRED. THE NUMBER OF TESTS SHALL BE AT THE DISCRETION OF THE CITY INSPECTOR. ALL TESTING SHALL BE THROUGH A LICENSED TESTING LABORATORY. THE MINIMUM COMPACTION SHALL BE 95% OF MAXIMUM DENSITY ON BOTH SUBGRADE AND TOP OF ROCK.

ADJUSTMENT OF CATCH BASIN LIDS OR GRATES, MONUMENTS CASES, VALVE BOXES, ETC SHALL BE THE RESPONSIBILITY OF THE CONTRACTOR OR DEVELOPER.

ROADWAY SECTION MAY BE ADJUSTED WITH THE APPROVAL OF THE CITY ENGINEER UPON SUBMISSION OF SUBSTANTIATING ENGINEERING DATA (CBR, ETC) TO SUPPORT THE ADJUSTMENT. FOR DESIGN PURPOSES, THE MINIMUM THICKNESS OF CLASS B ASPHALT SHALL BE 3" COMPACTED DEPTH.

ALL UTIITIES SHALL BE UNDERGROUND AS PART OF DEVELOPMENT FRONTAGE IMPROVEMENTS

SNOHOMISH
WASHINGTON

Bickford Avenue Roadway Section 3

Approved By:
City Engineer
Date: May 30, 2004

301c
Number

City of Snohomish Public Works Department

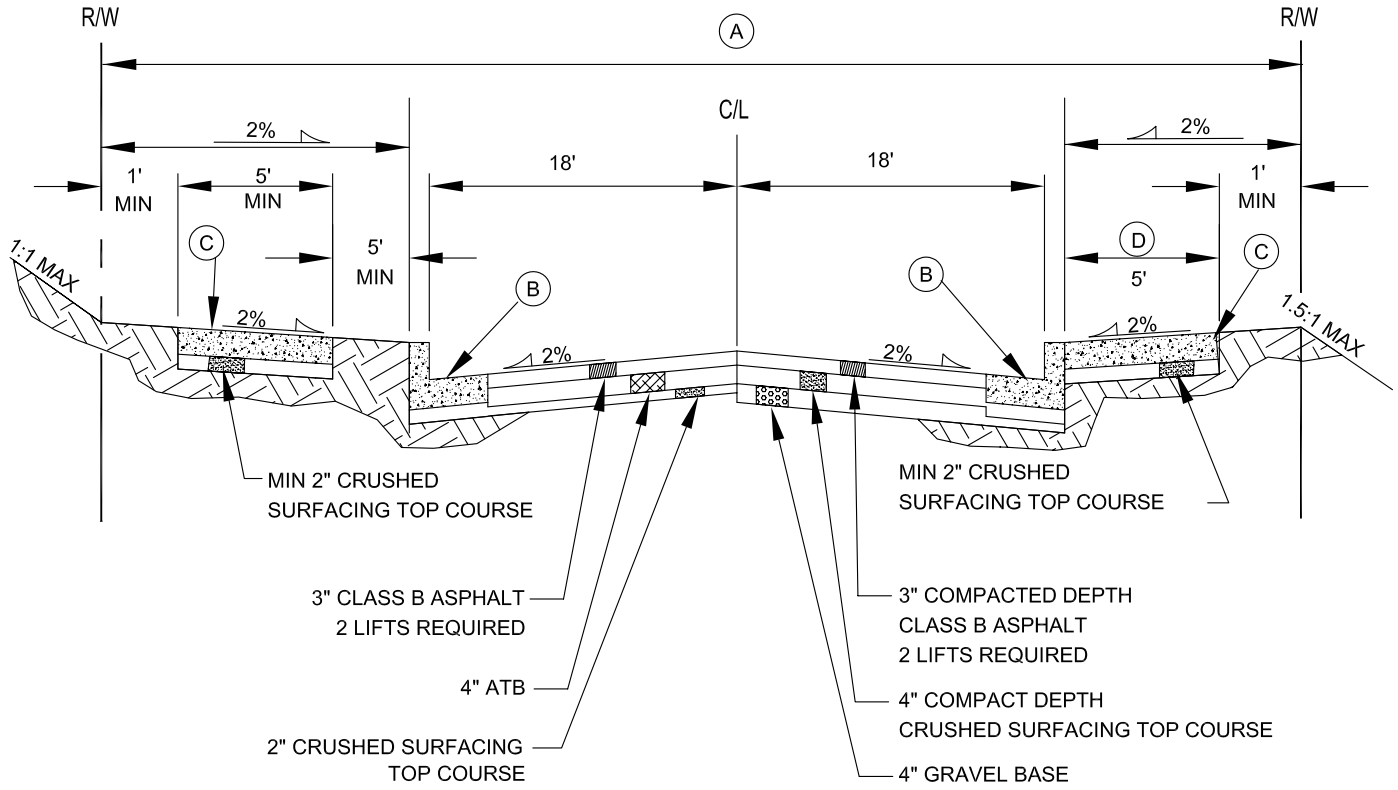

ALTERNATE ROADWAY SECTION

(D) VARIANCE MAY BE ADJUSTED FOR A NARROWER RIGHT OF WAY AND THE SIDEWALK LOCATED ADJACENT TO CURB PER SECTION 1.9 IF EXISTING SITE CONSTRAINTS CAUSE EXTREME HARDSHIPS FOR THE WIDER PAVEMENT SECTION AS DETERMINED BY THE PUBLIC WORKS DIRECTOR.

STANDARD ROADWAY SECTION

(A) 60' STANDARD RIGHT OF WAY

(B) CONCRETE CURB AND GUTTER TYPE A-1 SEE STD DWG 305A

(C) CEMENT CONCRETE SIDEWALK SEE STD DWG 306

NOTES:

1 IN WIDENING AREAS, THE EXISTING PAVEMENT EDGE SHALL BE SAW-CUT TO LEAVE A JOIN POINT. ANY TRAFFIC STRIPING REMOVED OR DAMAGED DURING WIDENING WORK SHALL BE REPLACED IN KIND OR AS DIRECTED BY THE CITY ENGINEER.

2 COMPACTION TESTS ON SUBGRADE AND SURFACING SHALL BE REQUIRED. THE NUMBER OF TESTS SHALL BE AT THE DISCRETION OF THE CITY INSPECTOR. ALL TESTING SHALL BE THROUGH A LICENSED TESTING LABORATORY. THE MINIMUM COMPACTION SHALL BE 95% OF MAXIMUM DENSITY ON BOTH SUBGRADE AND SURFACING.

3 ADJUSTMENT OF CATCH BASIN LIDS OR GRATES, MONUMENTS CASES, VALVE BOXES, ETC SHALL BE THE RESPONSIBILITY OF THE CONTRACTOR OR DEVELOPER.

4 ROADWAY SECTION MAY BE ADJUSTED WITH THE APPROVAL OF THE CITY ENGINEER UPON SUBMISSION OF SUBSTANTIATING ENGINEERING DATA (CBR, ETC) TO SUPPORT THE ADJUSTMENT. FOR DESIGN PURPOSES, THE MINIMUM THICKNESS OF CLASS B ASPHALT SHALL BE 3" COMPACTED DEPTH. COMPACTION SHALL BE AN AVERAGE OF 92% OF RICE DENSITY.

SNOHOMISH WASHINGTON

TYPICAL ROADWAY SECTIONS LOCAL ACCESS STREETS

Approved By: City Engineer

Date: May 30, 2004

302 Number

City of Snohomish Public Works Department

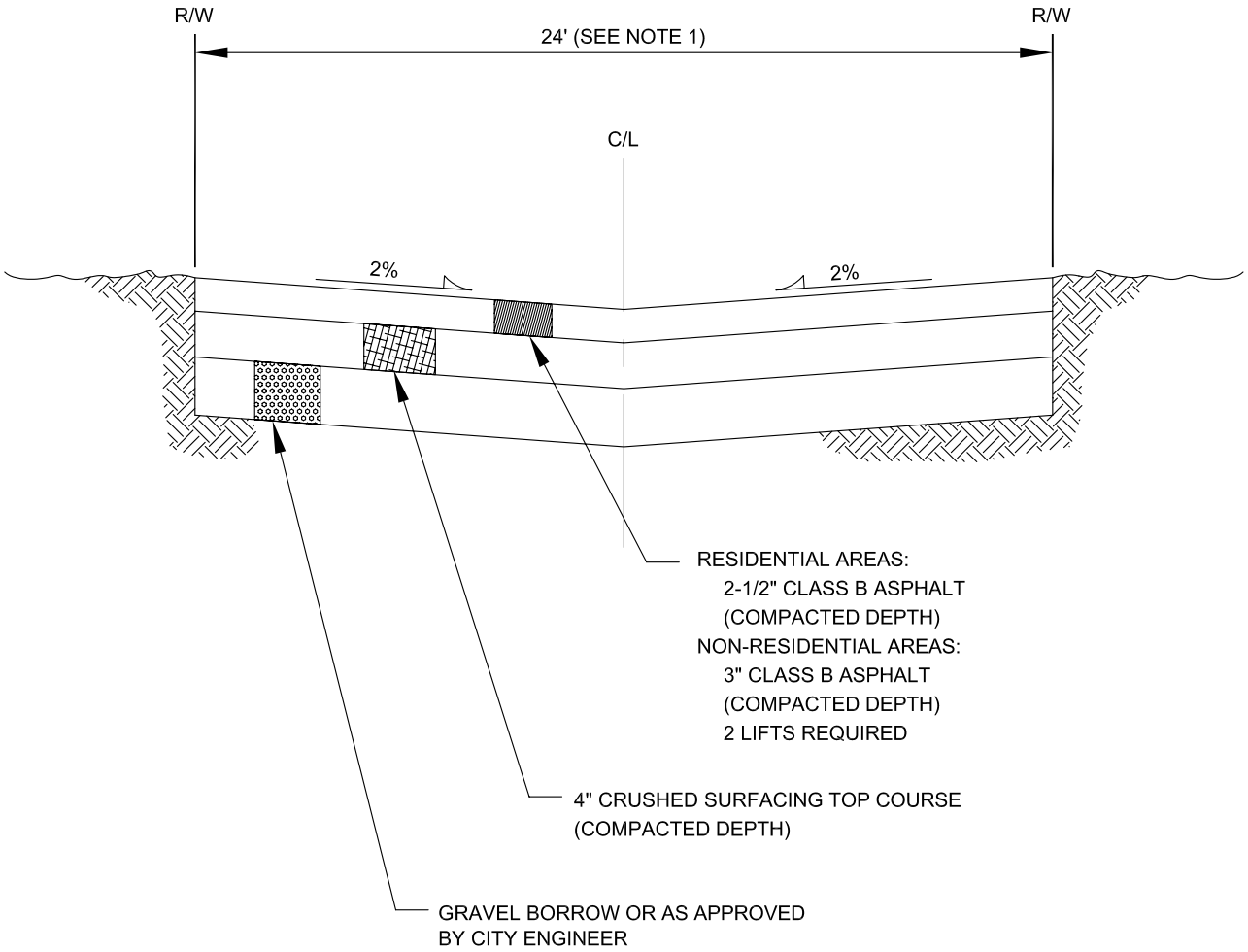

NOTES

1 ALL NEW ALLEYS SHALL HAVE A MINIMUM WIDTH OF 24'. EXISTING ALLEY RIGHT-OF-WAYS MAY VARY FROM 12' TO 24'.

2 DRAINAGE TO BE COLLECTED AT LOW END OF IMPROVED SECTION WITH CATCH BASIN CONNECTED TO STORM DRAINAGE SYSTEM.

3 COMPACTION TESTS ON SUBGRADE AND TOP OF ROCK WILL BE REQUIRED. THE NUMBER OF TESTS SHALL BE AT THE DISCRETION OF THE CITY ENGINEER. ALL TESTING SHALL BE THROUGH A LICENSED TESTING LABORATORY. THE MINIMUM COMPACTION SHALL BE 95% OF MAXIMUM DENSITY OF BOTH SUBGRADE AND TOP OF ROCK.

4 ADJUSTMENT OF CATCH BASIN LIDS OR GRATES, MONUMENT CASES, VALVE BOXES, ETC SHALL BE THE RESPONSIBILITY OF THE CONTRACTOR OR DEVELOPER AS REQUIRED.

SNOHOMISH WASHINGTON	**TYPICAL ROADWAY SECTION ALLEY**	Approved By: City Engineer Date: May 30, 2004	**303** Number
	City of Snohomish Public Works Department		

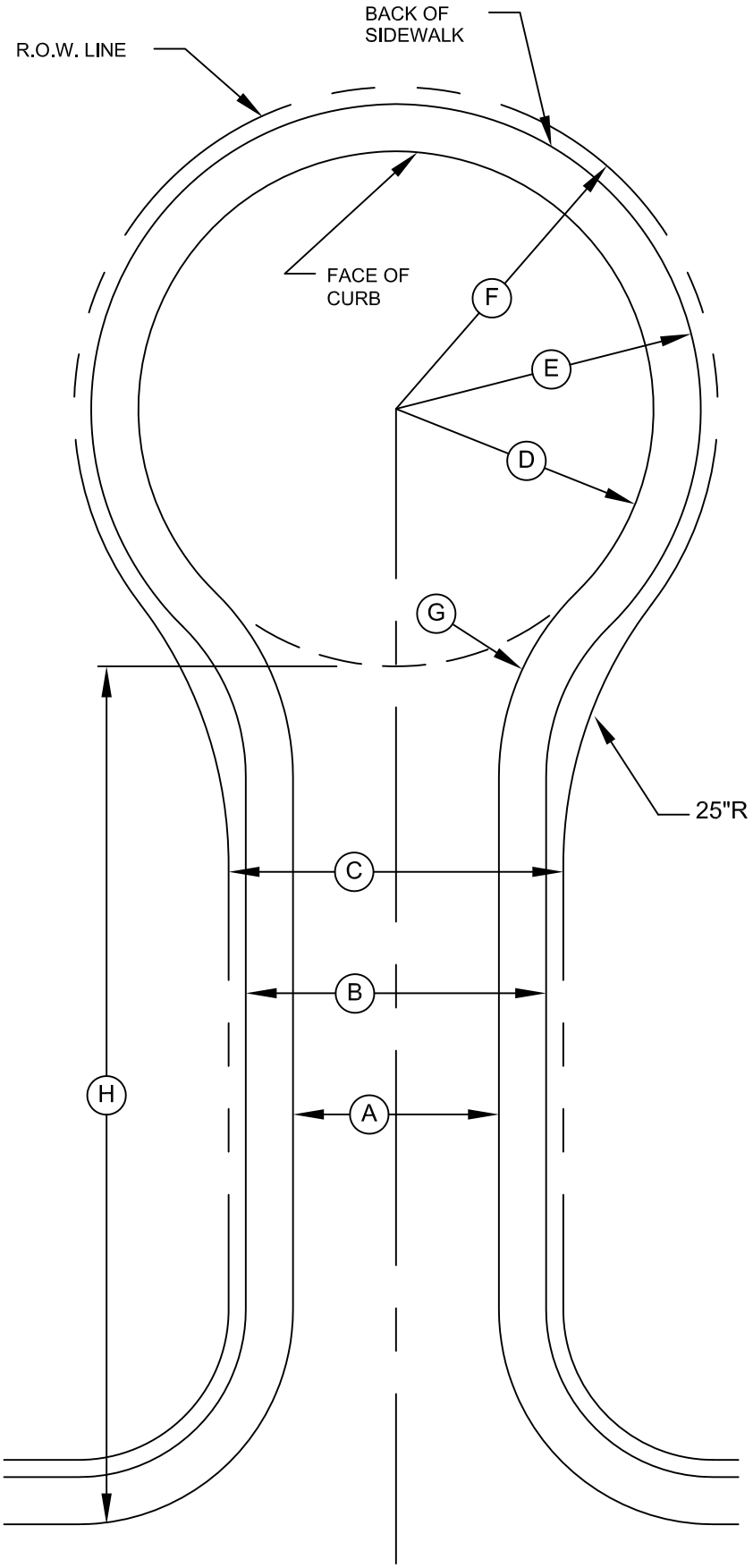

(A) VARIES 24' TO 48'+
SEE STD PLANS 300, 301 & 302

(B) VARIES 35' TO 59'+
SEE STD PLANS 300, 301 & 302

(C) VARIES 40' TO 80'+
SEE STD PLANS 300, 301 & 302

(D) VARIES 30' TO 45'
PER BELOW:

(H) STREET LENGTH	(D) MIN RADIUS
0'-150'	30'
151'-300'	35'
301'-500'	40'
501'-750'	45'
OVER 750'	SPECIAL APPROVAL REQUIRED

(E) 35.5' MIN. - LOCAL ACCESS STREETS AND SHORT SUBDIVISION STREETS

51.5' MIN. - ARTERIAL CLASSIFICATIONS

(F) 40' MIN. - LOCAL ACCESS STREETS AND SHORT SUBDIVISION STREETS

55' MIN. - ARTERIAL CLASSIFICATIONS

(G) CURB FACE RADIUS TO BE SAME AS RADIUS (D)

NOTE: CENTER LANDSCAPE ISLAND MAY BE ALLOWED. CITY ENGINEER APPROVAL REQUIRED.

SNOHOMISH WASHINGTON

TYPICAL CUL-DE-SAC

Approved By: Yosh Monzaki
City Engineer
Date: Aug 15, 2016

304
Number

City of Snohomish Public Works Department

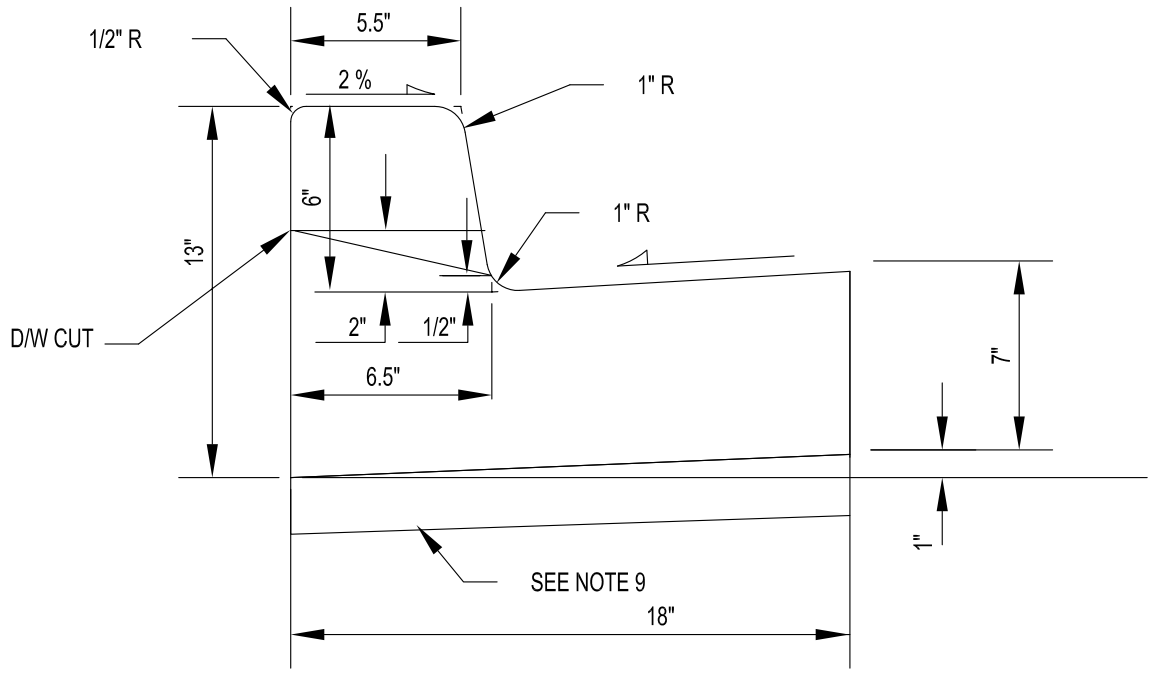

TYPICAL SECTION

NOTES

1 FORMS SHALL BE TRUE TO LINE AND GRADE AND SECURELY STAKED.

2 DUMMY JOINTS SHALL BE PLACED ON 15 FOOT CENTERS. DUMMY JOINTS SHALL BE 1/2" x 1-1/2".

3 THRU JOINTS SHALL BE PLACED ADJACENT TO CATCH BASINS, INLETS AND AT POINTS OF TANGENCY ON STREETS, ALLEY AND DRIVEWAY RETURNS. MAXIMUM SPACING SHALL BE 30 FT. PRE-MOLDED JOINT FILLER SHALL BE 1/2" WIIDE AND CONFORM TO AASHTO DESIGN M213.

4 ALL JOINTS SHALL BE CLEAN AND EDGED W/ 1/2" EDGING TOOL.

5 CONCRETE SHALL BE CEMENT CONCRETE, CLASS 3000.

6 STEEL FORMS ONLY SHALL BE USED ON TANGENT SECTIONS. WOOD FORMS MAY BE USED ON CURVED SECTIONS.

7 FINISH SHALL BE LIGHT BROOM FINISH.

8 THE FINISHED CURB SHALL BE SPRAYED WITH A TRANSPARENT CURING COMPOUND AND COVERED BY WATERPROOF PAPER OR PLASTIC MEMBRANE IN THE EVENT OF RAIN OR OTHER UNSUITABLE WEATHER. CURING TIME SHALL BE A MINIMUM OF 72 HOURS.

9 ALL CURB AND GUTTER SHALL BE PLACED ON A MIN OF 2" OF CRUSHED SURFACING TOP COURSE.

10 DUMMY JOINT 1/2" x 1 1/2" BETWEEN A-1 CURB AND GUTTER AND THE SIDEWALK.

SNOHOMISH WASHINGTON	**CEMENT CONCRETE CURB AND GUTTER TYPE "A"**	Approved By: City Engineer Date: May 30, 2004	**305a** Number
	City of Snohomish Public Works Department		

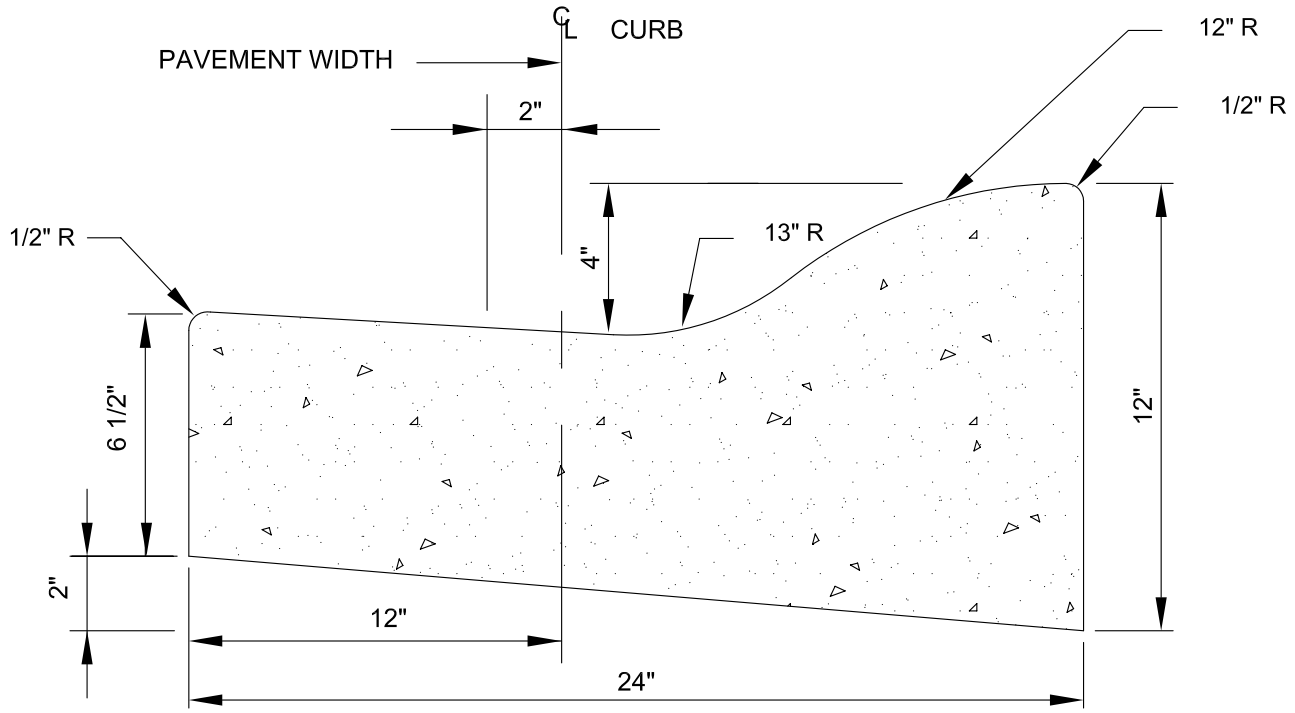

INDUSTRIAL USE ONLY

NOTES

1. ROLLED CURB AND GUTTER MAY ONLY BE USED IN HIGHLY INDUSTRIALIZED AREAS AND ONLY WITH WRITTEN APPROVAL OF THE CITY ENGINEER.
2. FORMS SHALL BE TRUE TO LINE AND GRADE AND SECURELY STAKED.
3. THRU JOINTS SHALL BE PLACED ADJACENT TO CATCH BASINS, INLETS, CURB RETURNS, ALLEYS, OR A MAXIMUM SPACING OF 30 FEET.
4. DUMMY JOINTS SHALL BE PLACED EVERY 15 FEET. DUMMY JOINTS SHALL BE 1/2" x 1 1/2".
5. THRU JOINTS SHALL BE 1/2" WIDE PRE-MOLDED JOINT FILLER.
6. ALL JOINTS SHALL BE CLEANED AND EDGED.
7. CONCRETE SHALL BE CEMENT CONCRETE CLASS 3000.
8. STEEL FORMS ONLY MAY BE USED ON TANGENT SECTIONS, WOOD FORMS MAY BE USED ON CURVED SECTIONS.
9. FINISH SHALL BE LIGHT BROOM.
10. CURB IS TO BE SPRAYED WITH TRANSPARENT CURING COMPOUND.
11. ALL SIDEWALKS POURED BEHIND ROLL CURB IN INDUSTRIAL APPLICATIONS SHALL BE SIX INCHES (6") THICK OVER 2" OF CRUSHED SURFACING TOP COURSE WITH TOP OF ROCK COMPACTED TO 95% OF MAXIMUM DENSITY.

SNOHOMISH WASHINGTON	**CEMENT CONCRETE ROLLED CURB AND GUTTER**	Approved By: City Engineer Date: May 30, 2004	**305b** Number
	City of Snohomish Public Works Department		

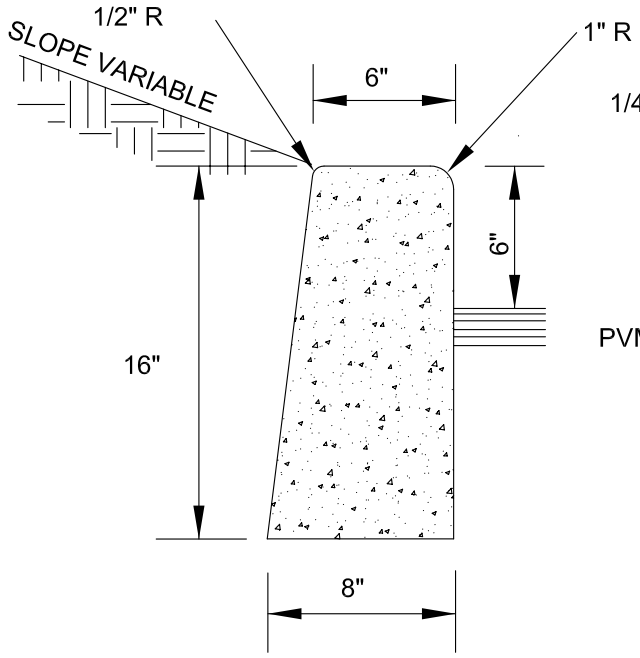

TYPE E-1 CURB

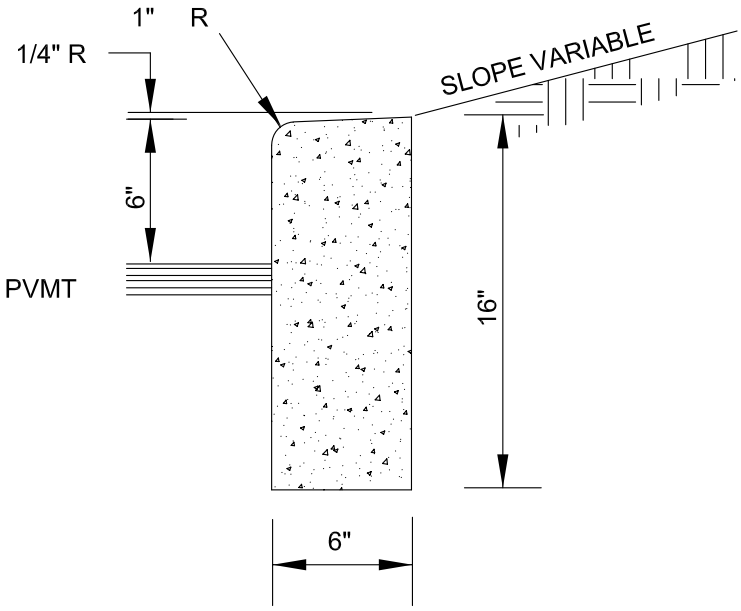

TYPE E-2 CURB

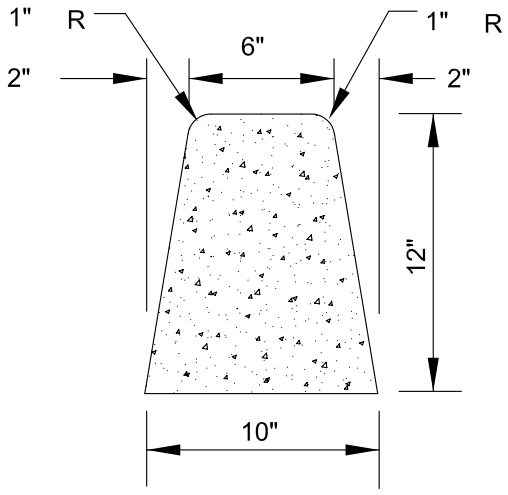

TYPE E-3 CURB

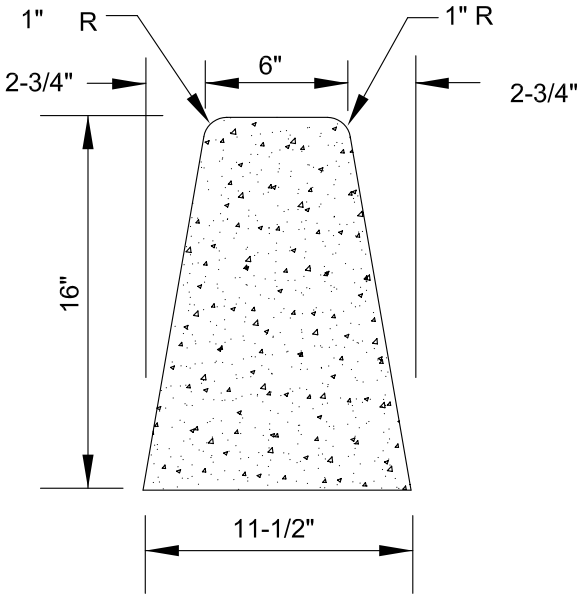

TYPE E-4 CURB

SNOHOMISH WASHINGTON	**CEMENT CONCRETE CURB TYPE: E1, E1,E3 AND E4**	Approved By: City Engineer Date: May 30, 2004	**305c** Number
	City of Snohomish Public Works Department		

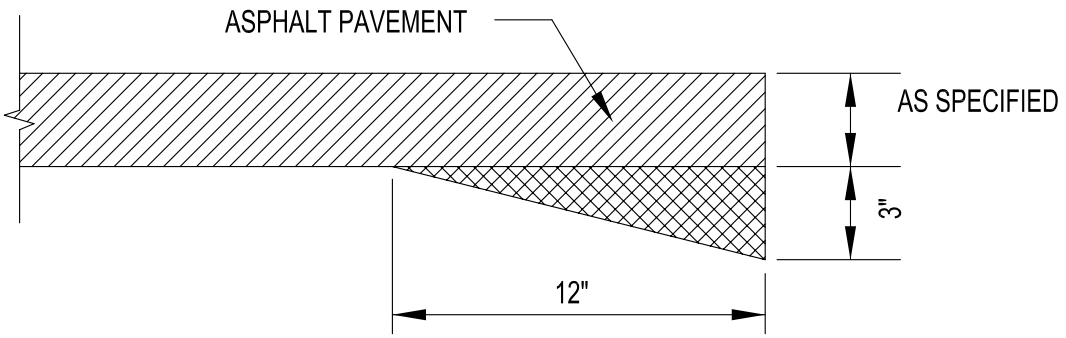

THICKER EDGE FOR ASPHALT PAVEMENT

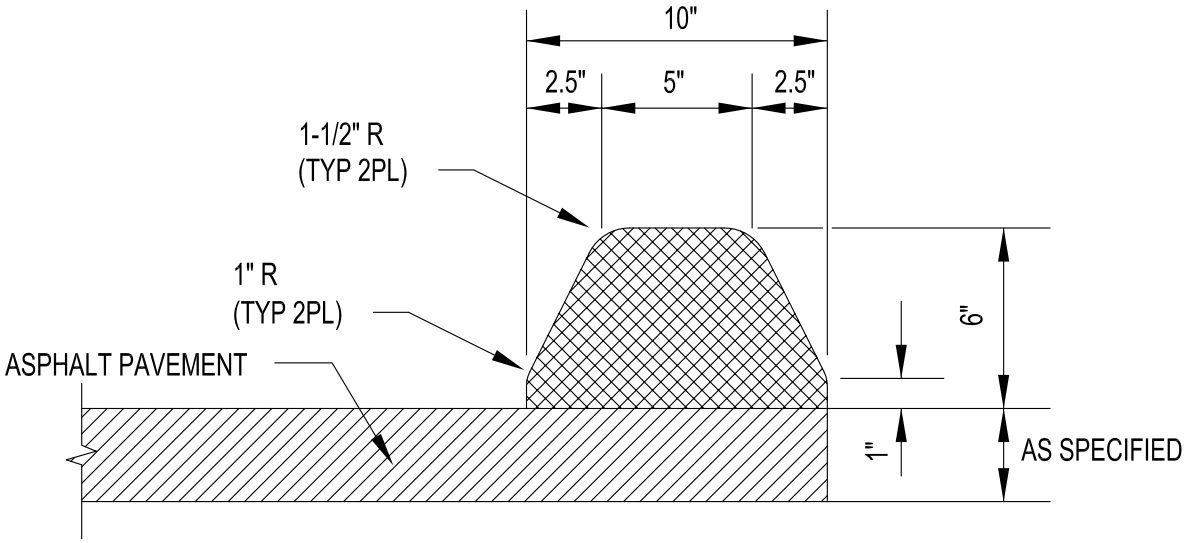

EXTRUDED ASPHALT CONCRETE CURB

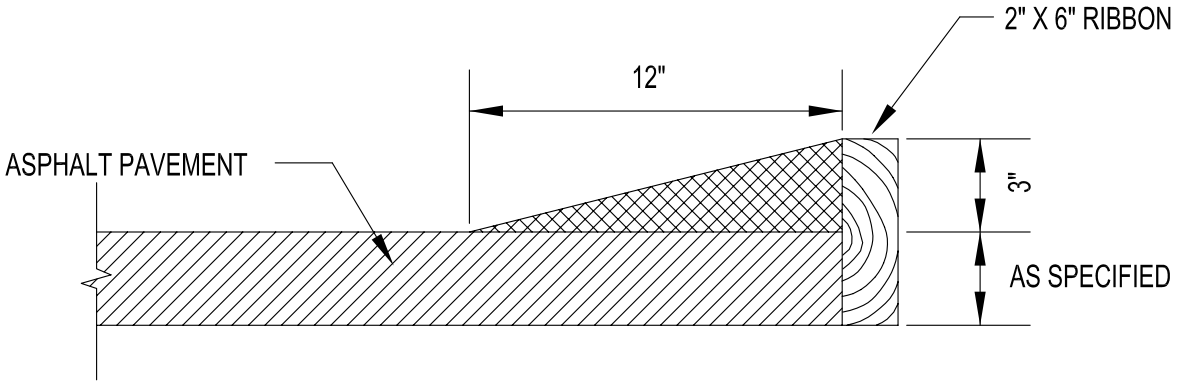

ASPHALT WEDGE CURB

SNOHOMISH WASHINGTON	**EXTRUDED ASPHALT CONCRETE SECTION**	Approved By: City Engineer Date: May 30, 2004	**305d** Number
	City of Snohomish Public Works Department		

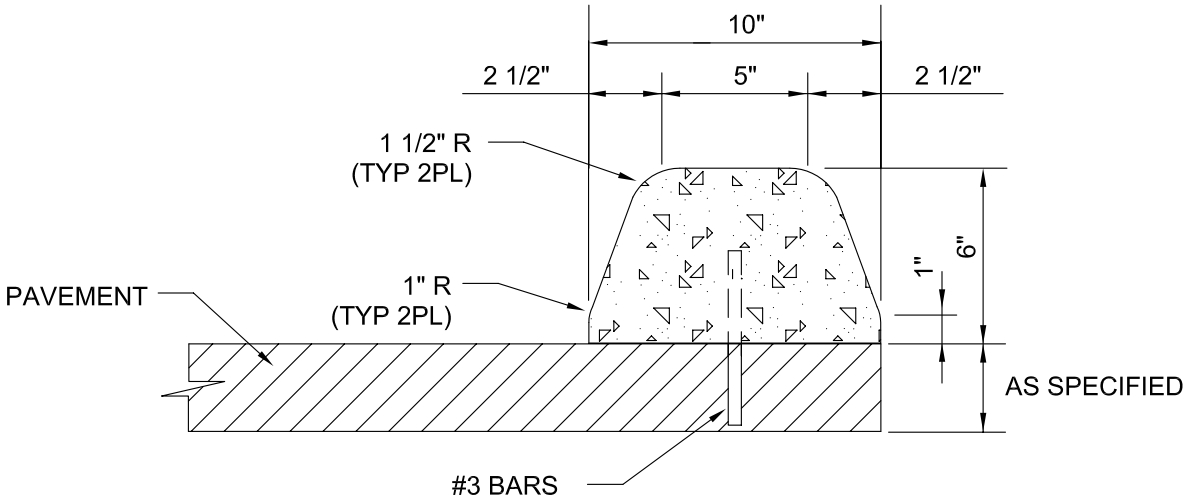

EXTRUDED CEMENT CONCRETE CURB

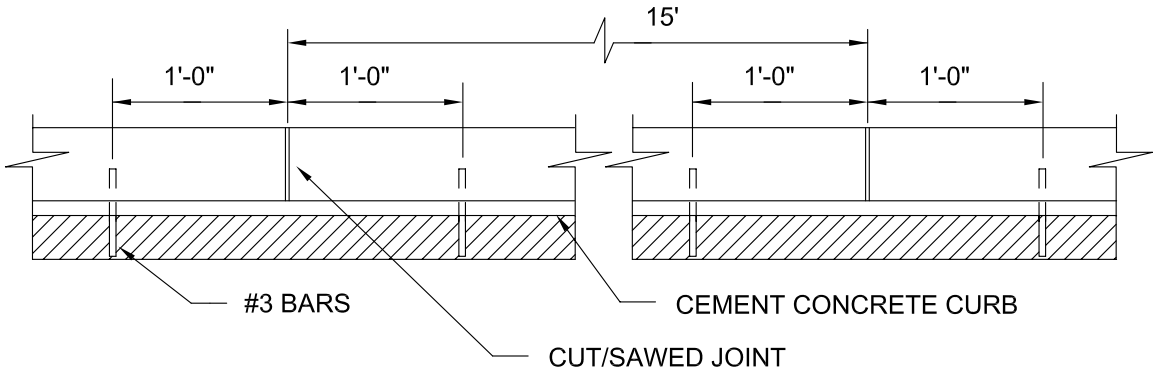

SPACING OF ANCHOR BARS

NOTES:

1. DUMMY JOINTS SHALL BE PLACED NOT TO EXCEED 15'CLS. THRU JOINTS SHALL BE PLACED ONLY AT POINTS OF TANGENCY ON STREET ALLEY AND DRIVEWAY RETURNS AND WHERE THRU JOINTS OCCUR IN THE PAVEMENT SLAB.

2. CONCRETE SHALL BE CLASS 3000 OR COMMERCIAL WITH AIR-ENTRAINMENT.

3. AT THE CONTRACTOR'S OPTION CONCRETE CURBS MAY BE ANCHORED TO THE EXISTING PAVEMENT EITHER BY PLACING STEEL TIE BARS 1 FOOT ON EACH SIDE OF EVERY JOINT, OR BY USING AN ADHESIVE. THE ADHESIVE SHALL MEET THE REQUIREMENTS OF SECTION 9-20 OF THE WSDOT/APWA STANDARD SPECIFICATIONS FOR TYPE II EPOXY RESIN.

SNOHOMISH WASHINGTON	**EXTRUDED CEMENT CONCRETE CURB**	Approved By: City Engineer Date: May 30, 2004	**305e** Number
	City of Snohomish Public Works Department		

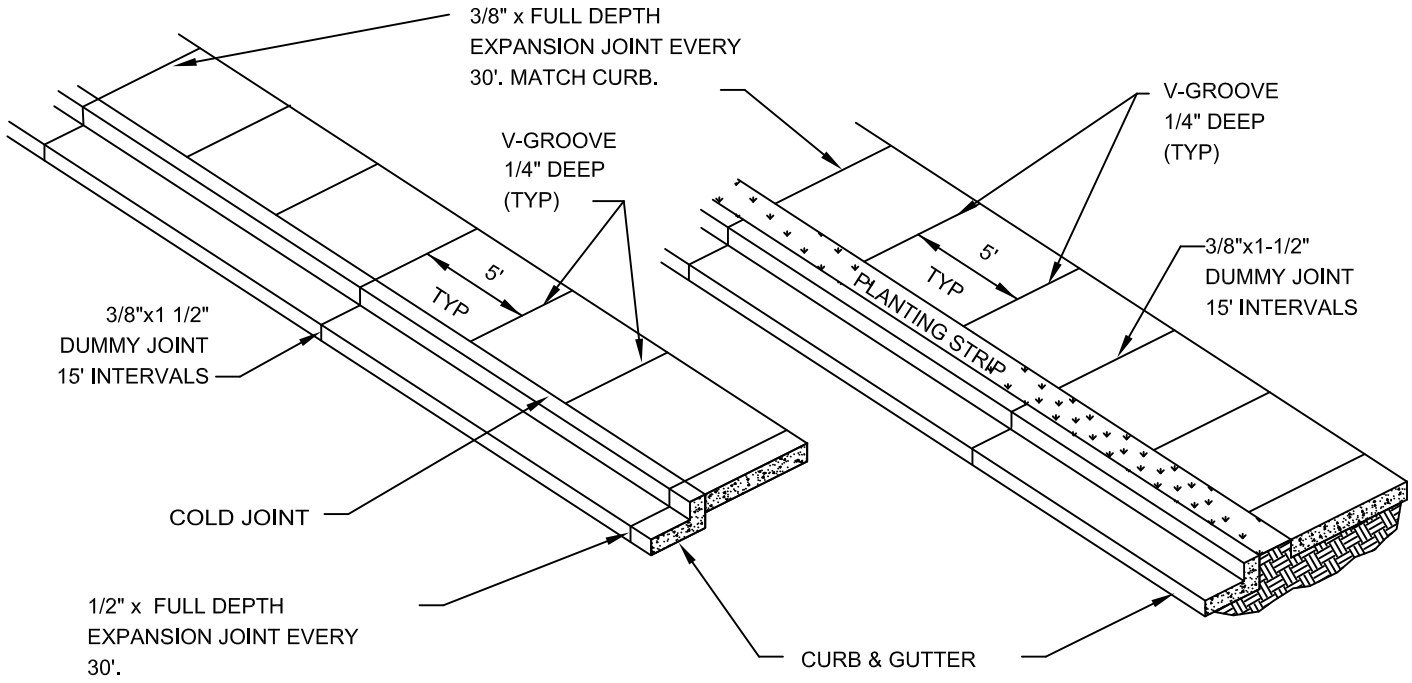

PLAN VIEWS

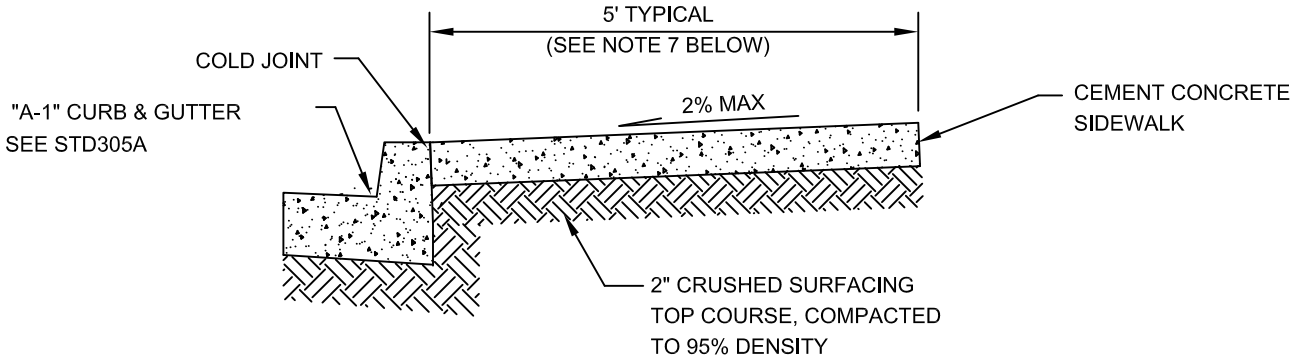

TYPICAL SECTION

NOTES

1. SIDEWALKS SHALL BE A MINIMUM OF 4" THICK, AND SHALL BE CLASS 3000 CEMENT CONCRETE, WITH AIR ENTRAINMENT (MIN 4.5 %, MAX 6.5 %).
2. FULL EXPANSION JOINTS SHALL GENERALLY BE PLACED TO MATCH THOSE PLACED IN ADJACENT CURB & GUTTER, WITH MAXIMUM SPACING OF 30 FEET, FINAL SPACING DETERMINATION SHALL BE DECIDED BY THE INSPECTOR IN THE FIELD.
3. SUBGRADE SHALL BE COMPACTED TO NOT LESS THAN 95% OF MAXIMUM DENSITY.
4. SIDEWALK SHALL BE AT LEAST 6" THICK IN DRIVEWAYS AND BEHIND ROLL-CURB.
5. THE FINISHED SIDEWALK SHALL BE SPRAYED WITH A TRANSPARENT CURING COMPOUND COVERED BY WATERPROOF PAPER OR PLASTIC SHEETING IN THE EVENT OF RAIN OR OTHER INCLEMENT WEATHER. CURING TIME SHALL BE FOR A MINIMUM OF 72 HOURS.
6. ALL JOINTS SHALL BE CLEANED AND EDGED WITH AN EDGER HAVING A 1/4" RADIUS.
7. SIDEWALKS ARE TYPICALLY 5' WIDE, EXCEPT 6' IN COMMERCIAL AREAS, OR AS APPROVED BY THE CITY ENGINEER.
8. POROUS CONCRETE SIDEWALK MAY BE USED SUBJECT TO APPROVAL OF THE CITY ENGINEER.

SNOHOMISH
WASHINGTON

CEMENT CONCRETE SIDEWALK DETAIL

Approved By:
Yosh Monzaki
City Engineer
Date: Aug 15, 2016

306
Number

City of Snohomish Public Works Department

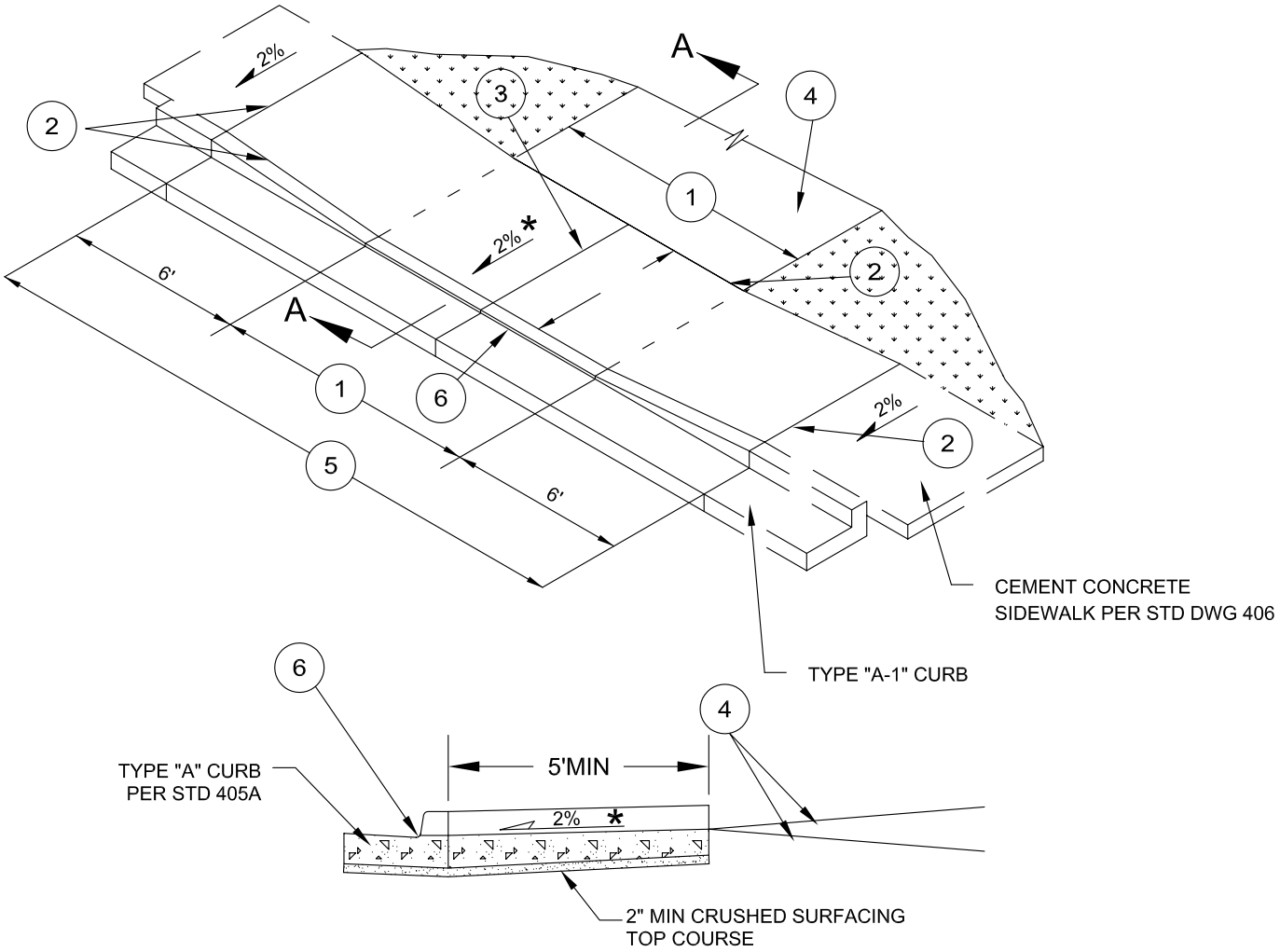

SECTION A-A

* Maximum 8% slope in commercial
Maximum 15% slope in residential

NOTES

1. EQUALS WIDTH OF DRIVEWAY AT PROPERTY LINE.
2. 3/8" WIDE FULL DEPTH EXPANSION JOINT.
3. 3/8" WIDE FULL DEPTH EXPANSION JOINT IF (1) IS 15' OR GREATER.
4. DRIVEWAY TO BE SURFACED WITH ASPHALT OR CONCRETE.
5. DRIVEWAY CEMENT CONCRETE SHALL BE A MIN OF 6" THICK INCLUDING WING RAMPS AND PLACED ON A MINIMUM OF 2" CRUSHED SURFACING TOP COURSE COMPACTED TO 95% MAXIMUM DENSITY.
6. SEE DWG. 405A

SNOHOMISH WASHINGTON	**CEMENT CONCRETE DRIVEWAY TYPE 1**	Approved By: City Engineer Date: May 30, 2004	**307** Number
	City of Snohomish Public Works Department		

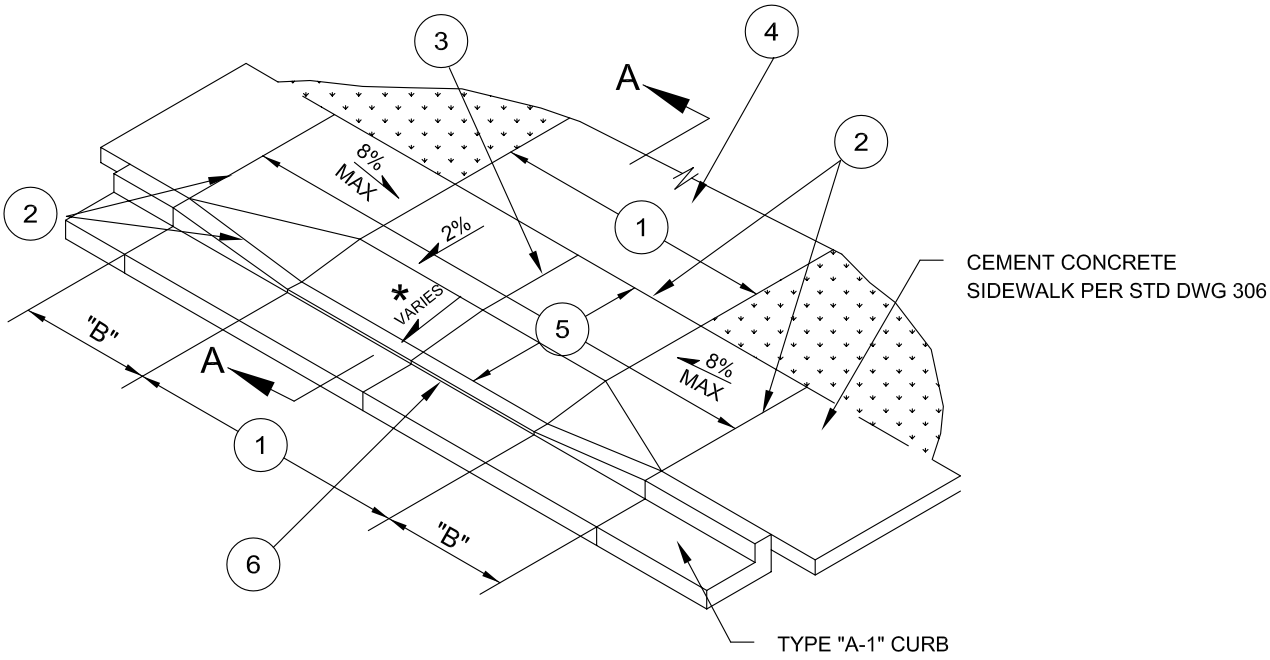

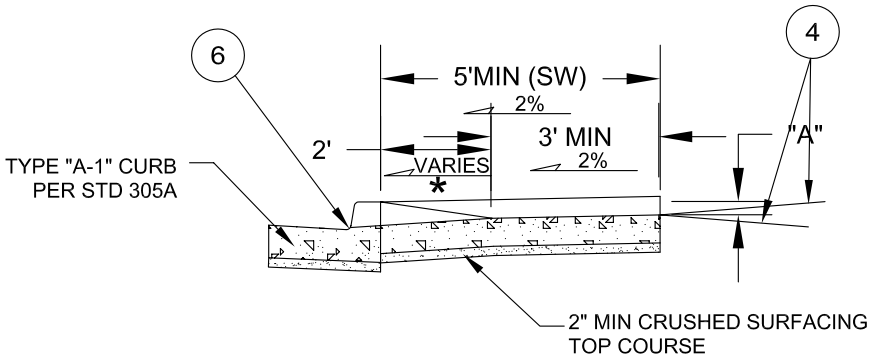

LOWERING BACK OF SIDEWALK "A" (IN)	LENGTH OF TRANSITION "B" (FT)
3	3
4	4
5	5

SECTION A-A

* Maximum 8% slope in commercial
Maximum 15% slope in residential

NOTES

1. EQUALS WIDTH OF DRIVEWAY AT PROPERTY LINE.
2. 3/8" WIDE FULL DEPTH EXPANSION JOINT.
3. 3/8" WIDE FULL DEPTH EXPANSION JOINT IF (1) IS 15' OR GREATER.
4. DRIVEWAY TO BE SURFACED WITH ASPHALT OR CONCRETE.
5. DRIVEWAY CEMENT CONCRETE SHALL BE A MIN OF 6" THICK INCLUDING WING RAMPS AND PLACED ON A MINIMUM OF 2" CRUSHED SURFACING TOP COURSE COMPACTED TO 95% MAXIMUM DENSITY.
6. MAINTAIN 1/2" LIP AT GUTTER.

SNOHOMISH
WASHINGTON

CEMENT CONCRETE DRIVEWAY TYPE 2

Approved By:
City Engineer
Date: May 30, 2004

308
Number

City of Snohomish Public Works Department

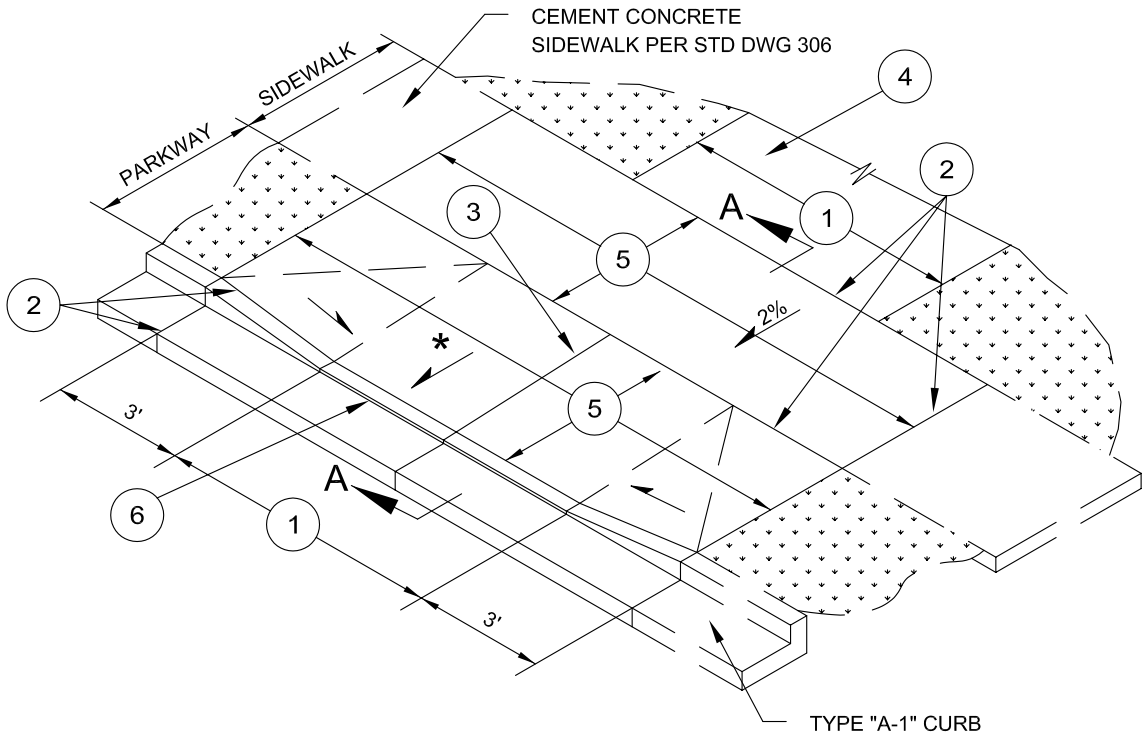

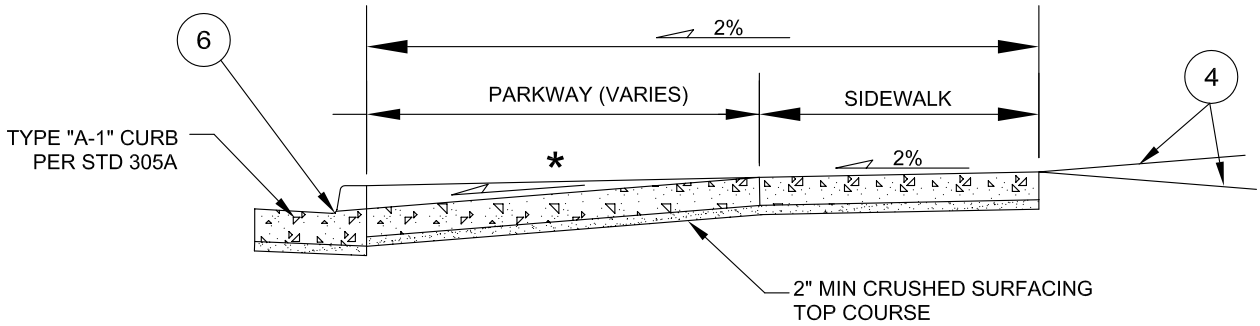

SECTION A-A

* Maximum 8% slope in commercial
Maximum 15% slope in residential

NOTES

1. EQUALS WIDTH OF DRIVEWAY AT PROPERTY LINE.
2. 3/8" WIDE FULL DEPTH EXPANSION JOINT.
3. 3/8" WIDE FULL DEPTH EXPANSION JOINT IF (1) IS 15' OR GREATER.
4. DRIVEWAY TO BE SURFACED WITH ASPHALT OR CONCRETE.
5. DRIVEWAY CEMENT CONCRETE SHALL BE A MIN OF 6" THICK INCLUDING WING RAMPS AND PLACED ON A MINIMUM OF 2" CRUSHED SURFACING TOP COURSE COMPACTED TO 95% MAXIMUM DENSITY.
6. MAINTAIN 1/2" LIP AT GUTTER

SNOHOMISH WASHINGTON	**CEMENT CONCRETE DRIVEWAY TYPE 3**	Approved By: City Engineer Date: May 30, 2004	**309** Number
	City of Snohomish Public Works Department		

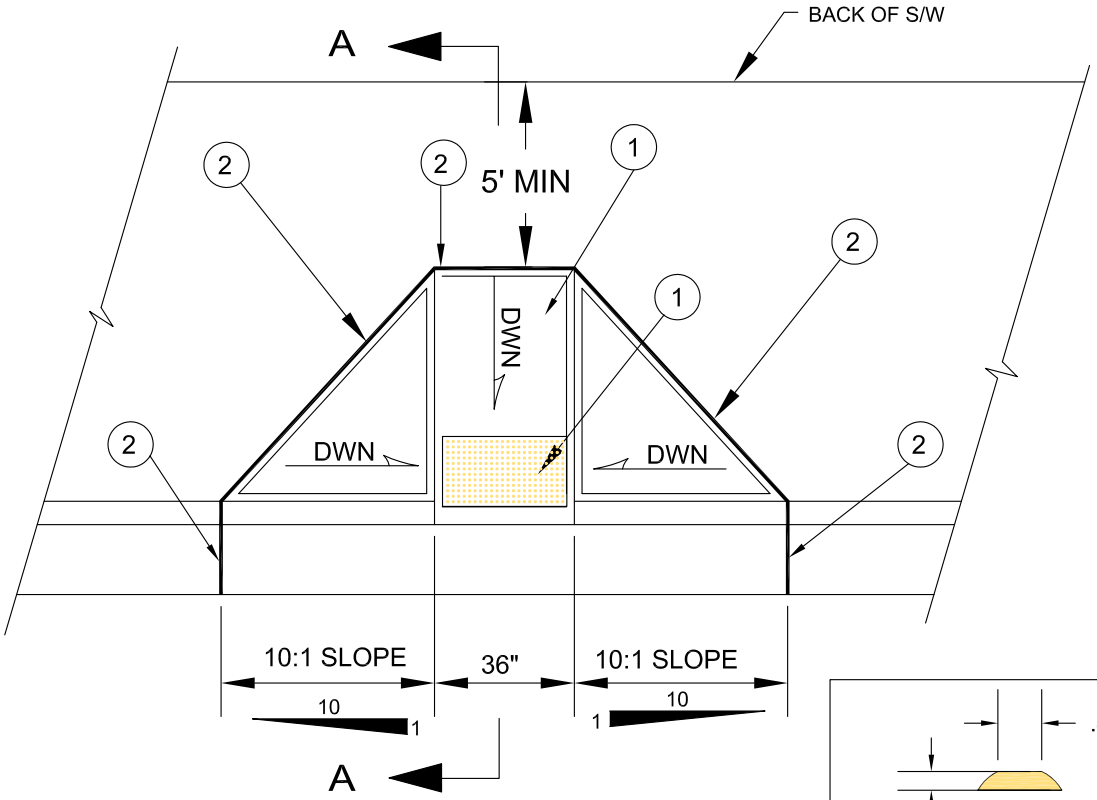

PLAN

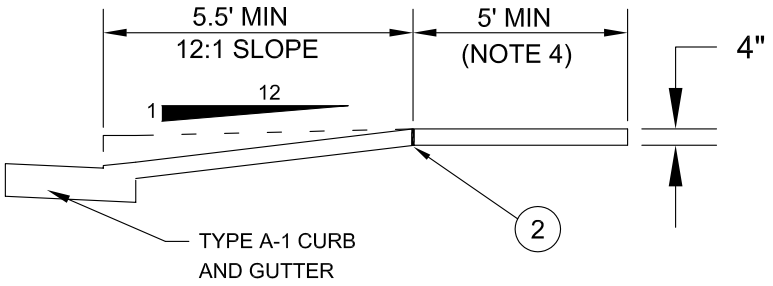

SECTION A-A

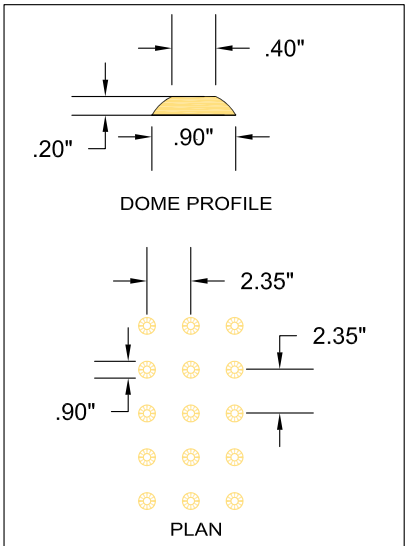

RAMP DOME DETAIL

NOTES:

1. RAMP TEXTURE IS TO BE BROOM FINISHED. TRUNCATED DOME WARNING DEVICES WILL BE INSTALLED 6" FROM CURB AND 24" DEEP AND PAINTED "SAFETY YELLOW". SPACING AND SIZING AS SHOWN IN DETAIL. PER ADAAG.2.9.2, CURRENT VERSION.
2. 3/8" EXPANSION JOINT.
3. IF LANDING AREA IS LESS THAN 5' USE TYPE C CURB RAMP (STD DWG 310C)
4. CURB RAMPS WILL NOT BE POURED INTEGRAL WITH SIDEWALK AND SHALL BE ISOLATED BY EXPANSION JOINT MATERIAL ON ALL SIDES, BUT NOT AT END OF RAMP ADJACENT TO ROADWAY.

SNOHOMISH WASHINGTON	**TYPE A CURB RAMP**	Approved By: City Engineer Date: May 30, 2004	**310a** Number
	City of Snohomish Public Works Department		

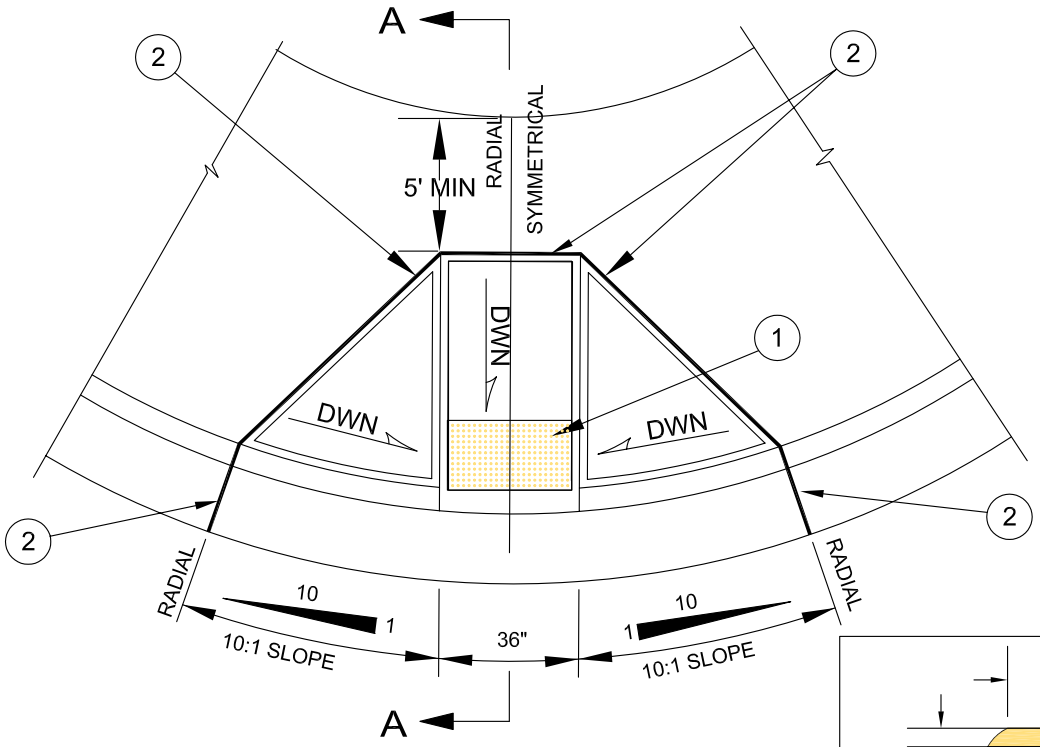

PLAN

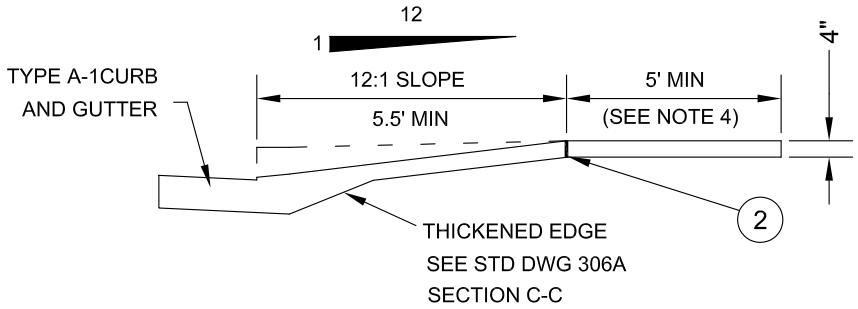

SECTION A-A

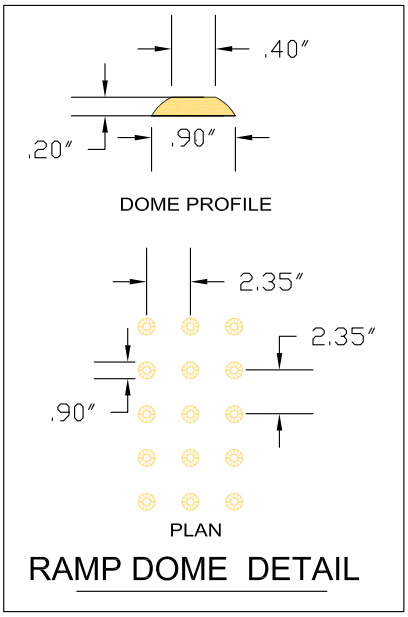

RAMP DOME DETAIL

NOTES:

1. RAMP TEXTURE IS TO BE BROOM FINISHED. TRUNCATED DOME WARNING DEVICES WILL BE INSTALLED 6" FROM CURB AND 24" DEEP AND PAINTED "SAFETY YELLOW". SPACING AND SIZING AS SHOWN IN DETAIL. PER ADAAG.2.9.2, CURRENT VERSION.

2. 3/8" EXPANSION JOINT.

3. IF LANDING AREA IS LESS THAN 5' USE TYPE D CURB RAMP (STD DWG 310D)

4. CURB RAMPS WILL NOT BE POURED INTEGRAL WITH SIDEWALK AND SHALL BE ISOLATED BY EXPANSION JOINT MATERIAL ON ALL SIDES, BUT NOT AT END OF RAMP ADJACENT TO ROADWAY.

SNOHOMISH WASHINGTON	**TYPE "B" CURB RAMP**	Approved By: City Engineer Date: May 30, 2004	**310b** Number
	City of Snohomish Public Works Department		

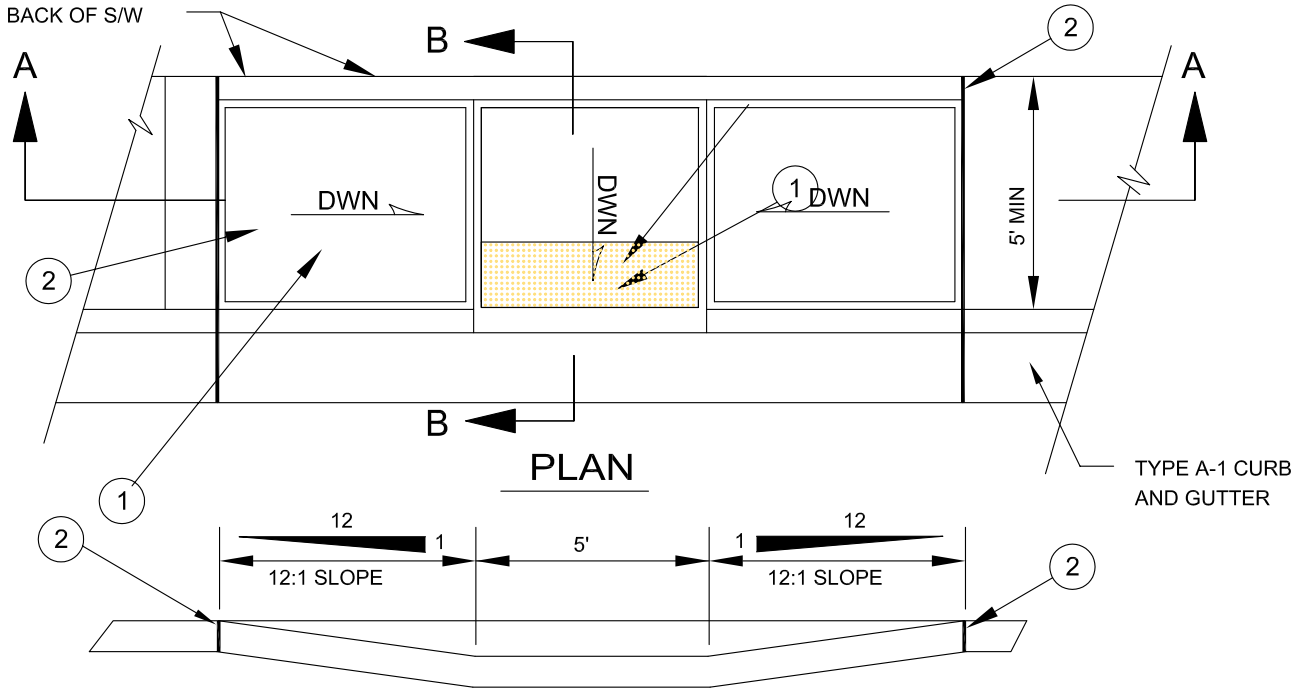

PLAN

SECTION A-A

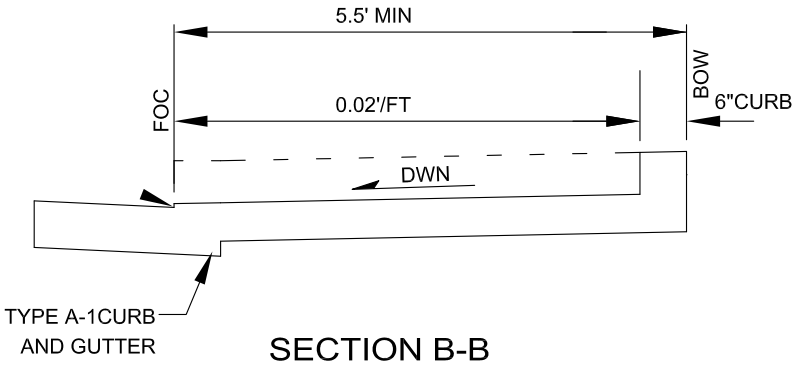

SECTION B-B

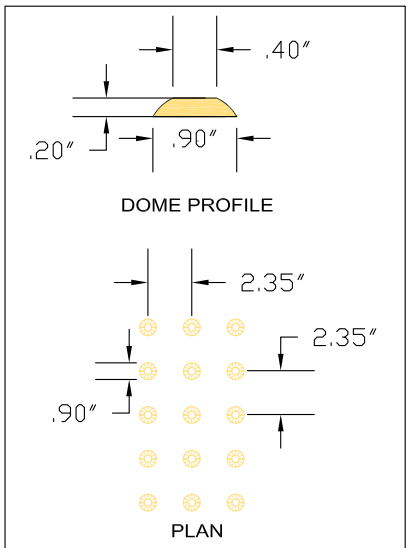

RAMP DOME DETAIL

NOTES:

1. RAMP TEXTURE IS TO BE BROOM FINISHED. TRUNCATED DOME WARNING DEVICES WILL BE INSTALLED 6" FROM CURB AND 24" DEEP AND PAINTED "SAFETY YELLOW". SPACING AND SIZING AS SHOWN IN DETAIL. PER ADAAG.2.9.2, CURRENT VERSION.

2. 3/8" EXPANSION JOINT.

3. CURB RAMPS WILL NOT BE POURED INTEGRAL WITH SIDEWALK AND SHALL BE ISOLATED BY EXPANSION JOINT MATERIAL ON ALL SIDES, BUT NOT AT END OF RAMP ADJACENT TO ROADWAY.

SNOHOMISH WASHINGTON	**TYPE "C" CURB RAMP**	Approved By: City Engineer Date: May 30, 2004	**310c** Number
	City of Snohomish Public Works Department		

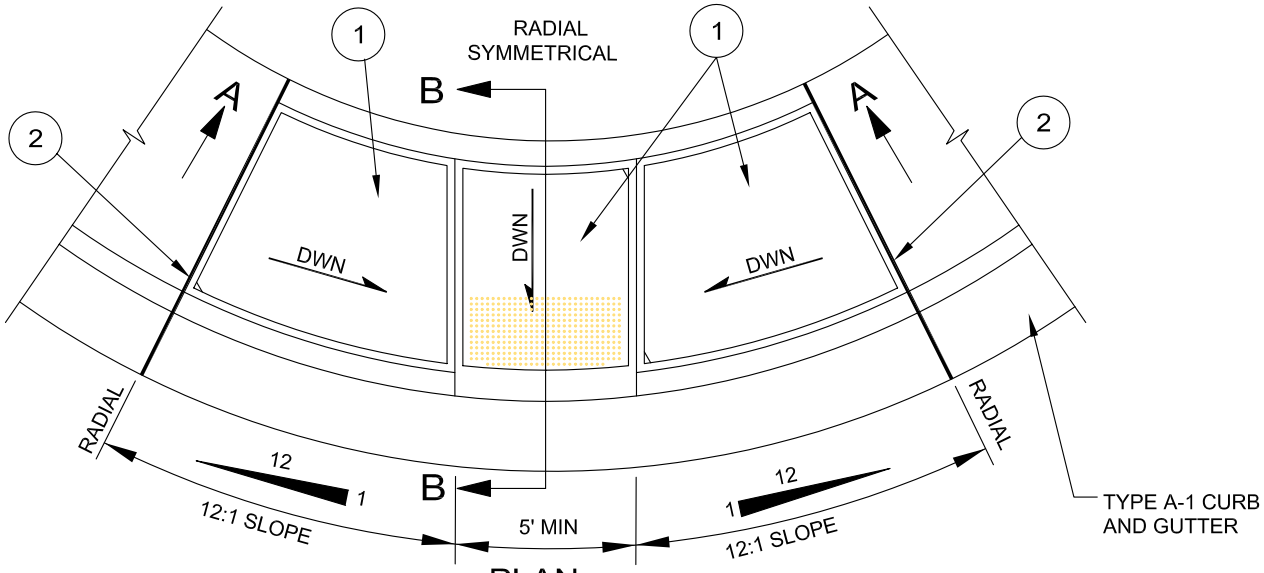

PLAN

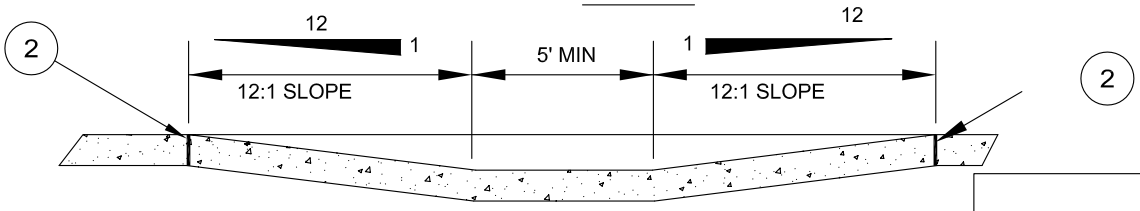

SECTION A-A

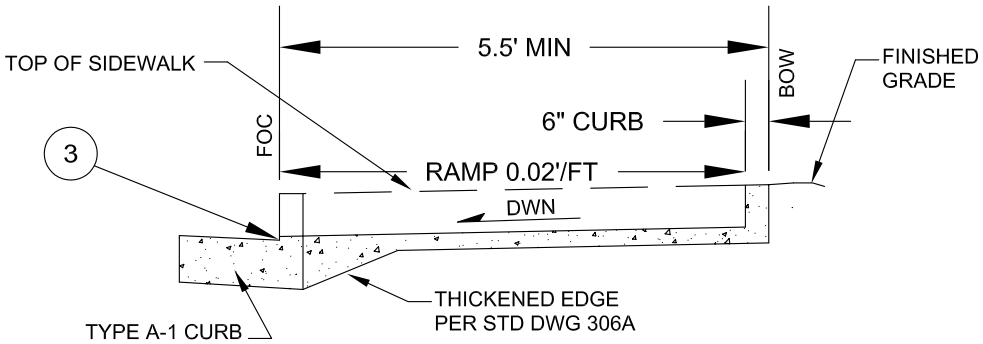

SECTION B-B

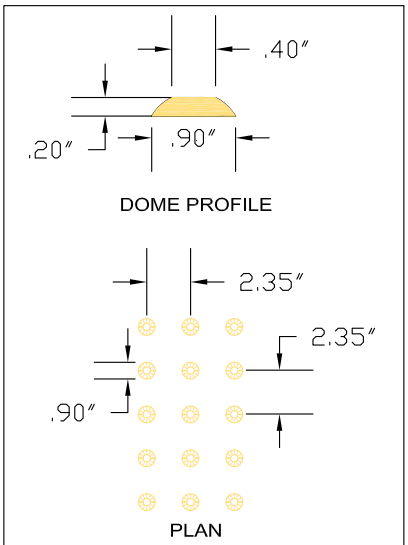

RAMP DOME DETAIL

NOTES:

1. RAMP TEXTURE IS TO BE BROOM FINISHED. TRUNCATED DOME WARNING DEVICES WILL BE INSTALLED 6" FROM CURB AND 24" DEEP AND PAINTED "SAFETY YELLOW". SPACING AND SIZING AS SHOWN IN DETAIL. PER ADAAG.2.9.2, CURRENT VERSION.
2. 3/8" EXPANSION JOINT.
3. 1/2" MAXIMUM LIP AT GUTTER LINE.
4. CURB RAMPS WILL NOT BE POURED INTEGRAL WITH SIDEWALK AND SHALL BE ISOLATED BY EXPANSION JOINT MATERIAL ON ALL SIDES, BUT NOT AT END OF RAMP ADJACENT TO ROADWAY.

SNOHOMISH
WASHINGTON

TYPE "D" CURB RAMP

Approved By:
City Engineer
Date: May 30, 2004

310d
Number

City of Snohomish Public Works Department

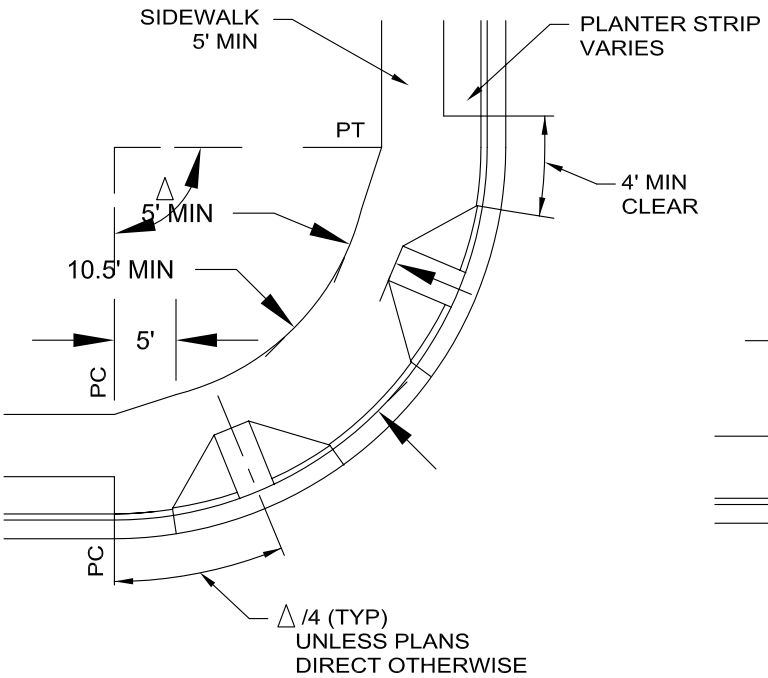

ALTERNATE "A"

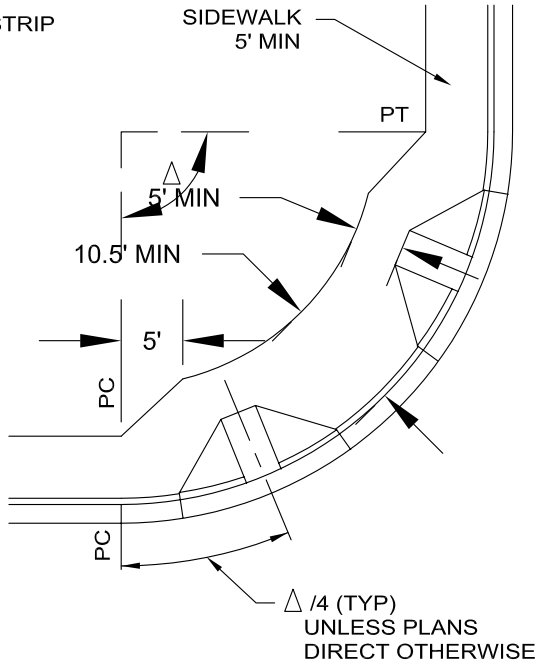

ALTERNATE "B"

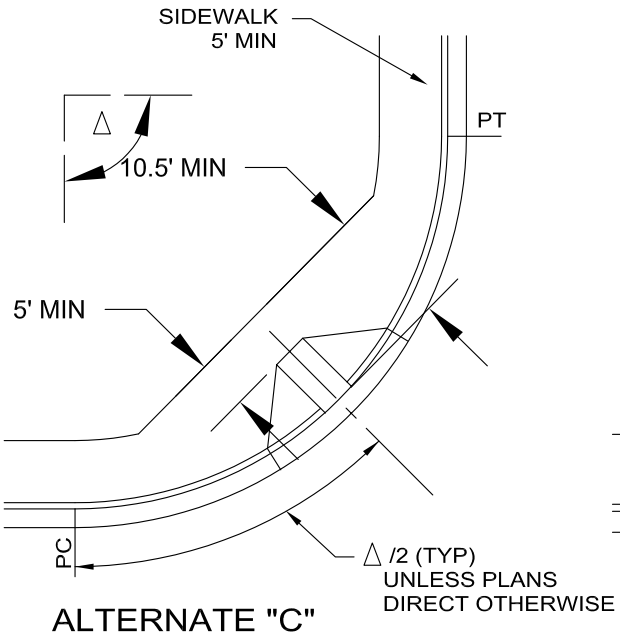

ALTERNATE "C"

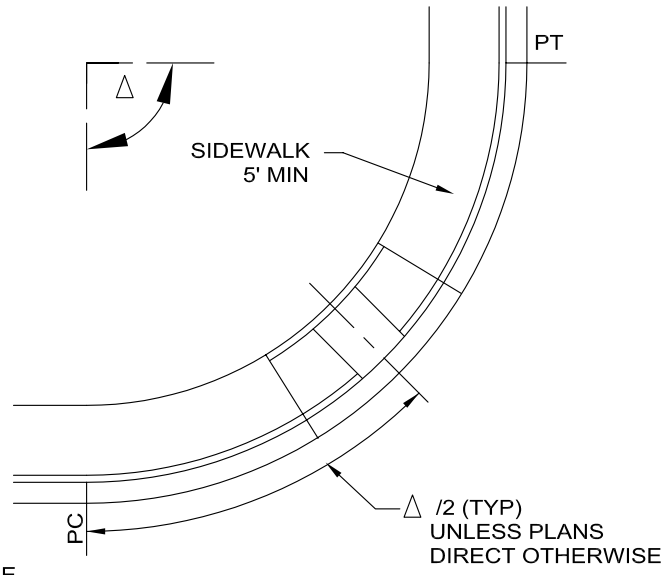

ALTERNATE "D"

NOTES:

1. ALTERNATES "A" & "B" FOR USE AT ARTERIAL/ARTERIAL AND ARTERIAL/LOCAL ACCESS INTERSECTIONS.
2. ALTERNATES "C" & "D" FOR USE AT LOCAL ACCESS/LOCAL ACCESS INTERSECTIONS OR AS APPROVED BY CITY ENGINEER.
3. FOR ALTERNATE "A", "B" AND "C" USE CURB RAMP PER STD DWGS 306A AND 310B.
4. FOR ALTERNATE "D" USE CURB RAMP PER STD DWGS 306A AND 310D.

SNOHOMISH WASHINGTON	**TYPICAL CURB RAMP LOCATIONS**	Approved By: City Engineer Date: May 30, 2004	311 Number
	City of Snohomish Public Works Department		

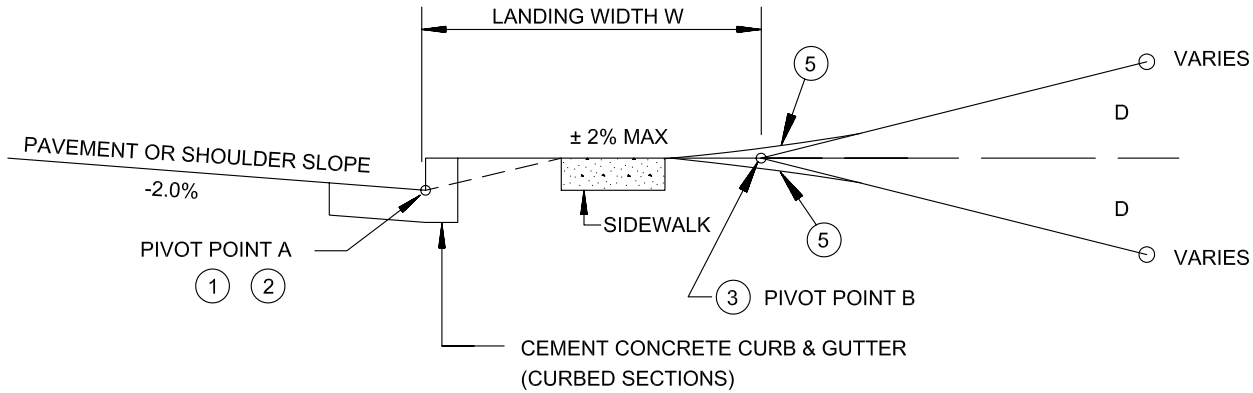

NOTES:

1. SEE STD DWG 4-140 FOR CURB DETAILS.

2. WHEN ACCESSING SHOULDERED ROADWAYS, MAINTAIN SHOULDER SLOPE TO PIVOT POINT A.

3. ACCESS POINT GRADE SHALL BE MEASURED FROM PIVOT POINT B.

4. LANDING WIDTH W MAY BE REDUCED SUBJECT TO APPROVAL OF THE ENGINEER IN ACCORDANCE WITH SECTION 1-05 OF THESE STANDARDS.

5. A VERTICAL CURVE SHALL BE CONSTRUCTED TO TRANSITION THE LANDING TO THE ACCESS APPROACH. THE VERTICAL SEPARATION BETWEEN THE CURVE AND A 10-FOOT CHORD OF THE CURVE SHALL NOT EXCEED 3.25 INCHES (WHERE D IS POSITIVE) OR 2.00 INCHES (WHERE D IS NEGATIVE).

TYPE OF ACCESS	ACCESSING	LANDING WIDTH W (4)	ACCESS GRADE D
RESIDENTIAL (URBAN)	NON-ARTERIAL	15'	± 15% MAX.
RESIDENTIAL (URBAN)	ARTERIAL	15'	± 7% MAX.
COMMERCIAL/INDUSTRIAL	NON-ARTERIAL	30'	± 8% MAX.
COMMERCIAL/INDUSTRIAL	ARTERIAL	30'	± 5% MAX.

SNOHOMISH
WASHINGTON

ACCESS GRADE POINTS

Approved By:
City Engineer
Date: May 30, 2004

312
Number

City of Snohomish Public Works Department

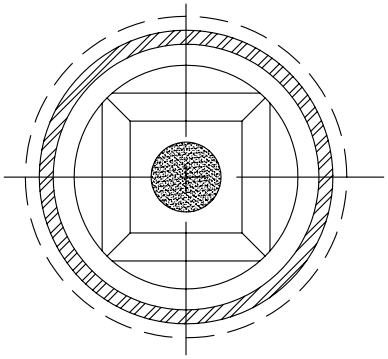

PLAN

COVER REMOVED

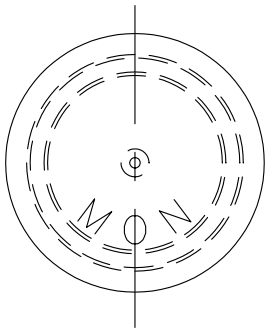

COVER PLAN

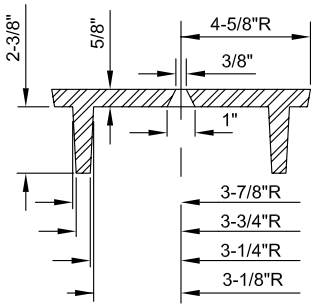

COVER SECTION

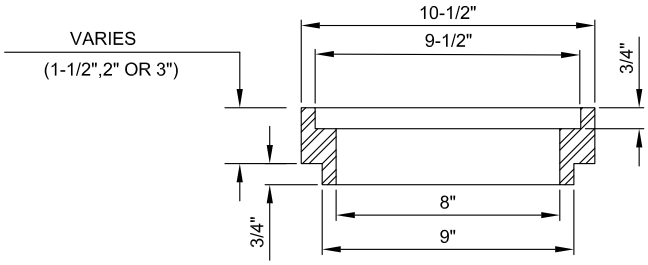

EXTENSION SECTION

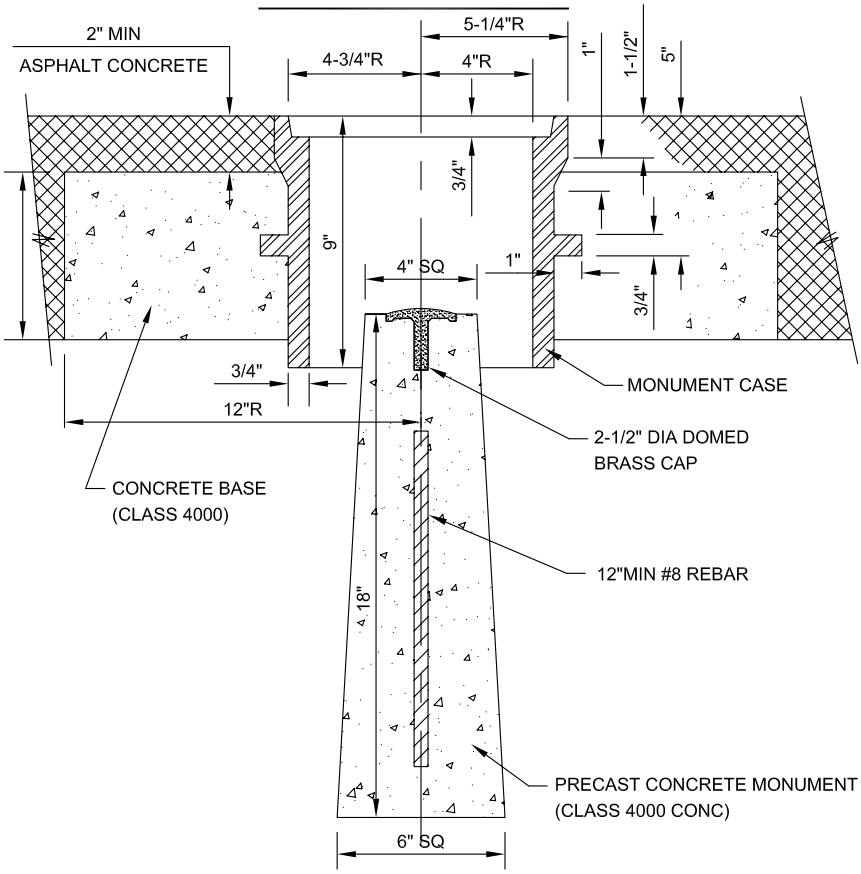

SECTION

NOTES

1. MONUMENTS IN NON PAVED AREAS SHALL BE 3" ABOVE GRADE.
2. ALL MONUMENTS SHALL BE PRECAST CONC WITH REBAR AND 2-1/2" DIA BRASS CAP.
3. MONUMENT CASE AND RISER SECTION SHALL BE CAST IRON PER ASTM-A48, CLASS 30, WITH BITUMINOUS COATING.
4. COVER SHALL BE DUCTILE IRON PER ASTM-A536, GRADE 80-55-06. WITH BITUMINOUS COATING.
5. LEGEND ON COVER SHALL BE 1/8" RAISED INTEGRALLY CAST LETTERS 1" HIGH WITH A MIN FACE WIDTH OF 3/16".

SNOHOMISH WASHINGTON	**SURVEY MONUMENT**	Approved By: City Engineer Date: May 30, 2004	313 Number
	City of Snohomish Public Works Department		

NOTES

THIS MONUMENT SHALL BE USED ONLY FOR CONTROL MONUMENTATION SURVEYS AT LOCATIONS APPROVED BY THE CITY ENGINEER AS DESIGNATED BY LICENSED SURVEYOR.

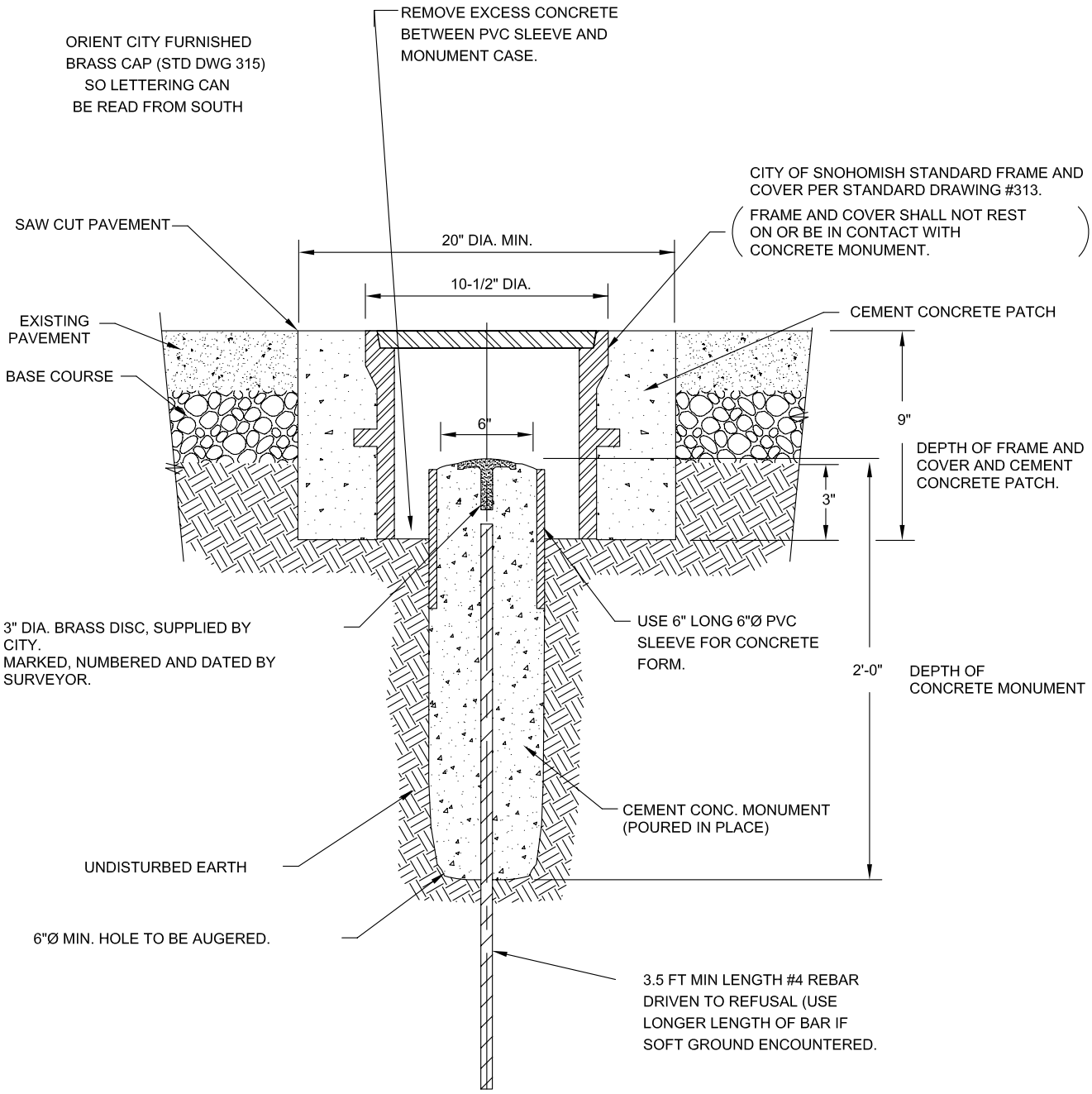

SNOHOMISH WASHINGTON	**SURVEY CONTROL MONUMENT**	Approved By: City Engineer Date: May 30, 2004	**314** Number
	City of Snohomish Public Works Department		

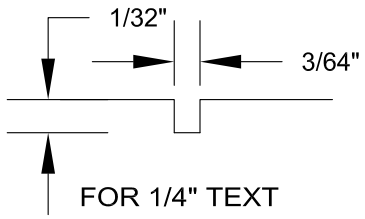

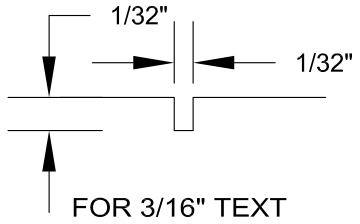

GROOVE DETAIL

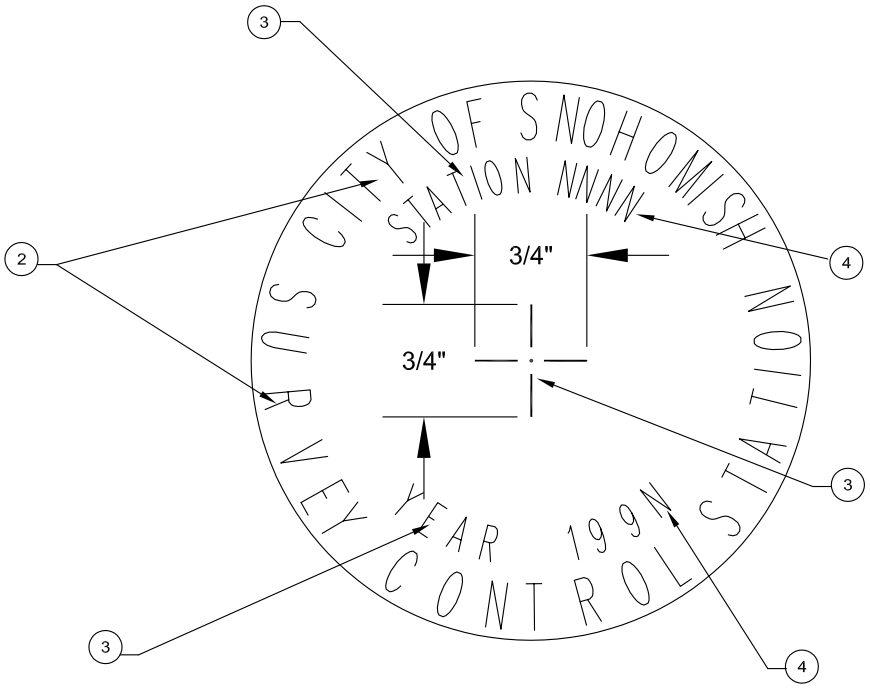

PLAN

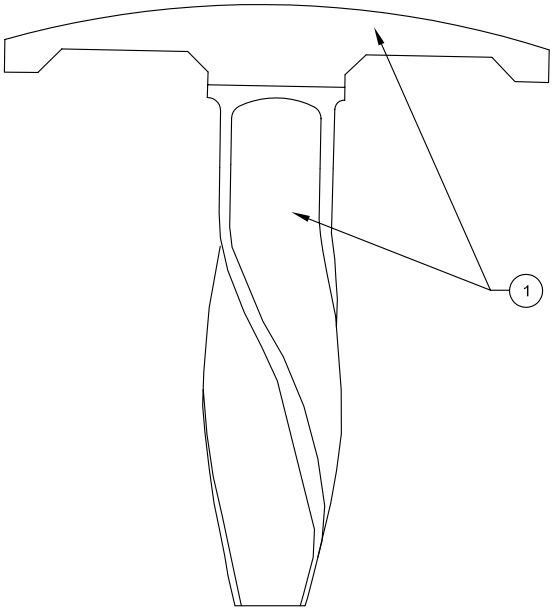

ELEVATION

NOTES:

1. DIMENSIONS OF CASTING BASE & CAP PER WSDOT/APWA STANDARD PLAN H-6.
2. GROOVE FOR 1/4" HIGH CAST LETTERING ON CAP SHALL BE 1/32 IN DEEP BY 3/64 IN WIDE.
3. GROOVE FOR 3/16" HIGH CAST LETTERING AND LINES ON CAP SHALL BE 1/32 IN DEEP BY 1/32 IN WIDE.
4. FIELD STAMPED LETTERS AND NUMBERS SHALL BE OF SUFFICIENT DEPTH AND WIDTH SO AS TO BE CLEARLY READABLE AND SHALL BE A MIN. OF 3/16 IN. HIGH.
5. THIS BRASS DISC SHALL ONLY BE USED FOR CONTROL MONUMENTATION PER STD DWG 314

SNOHOMISH WASHINGTON	**SURVEY CONTROL MONUMENT 3" BRASS DISC**	Approved By: City Engineer Date: May 30, 2004	**315** Number
	City of Snohomish Public Works Department		

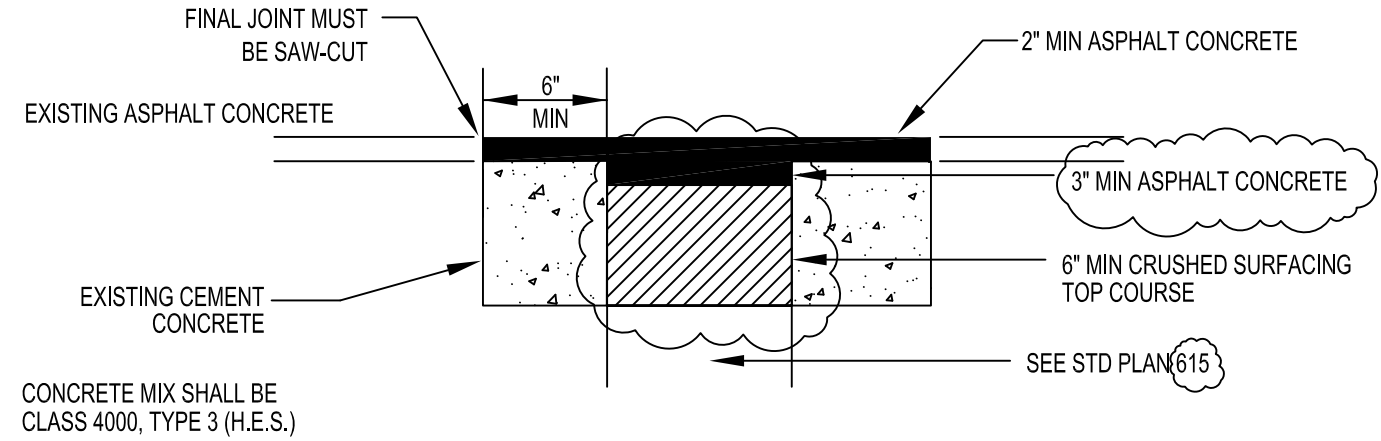

EXISTING ASPHALT CONCRETE OVER CEMENT CONCRETE

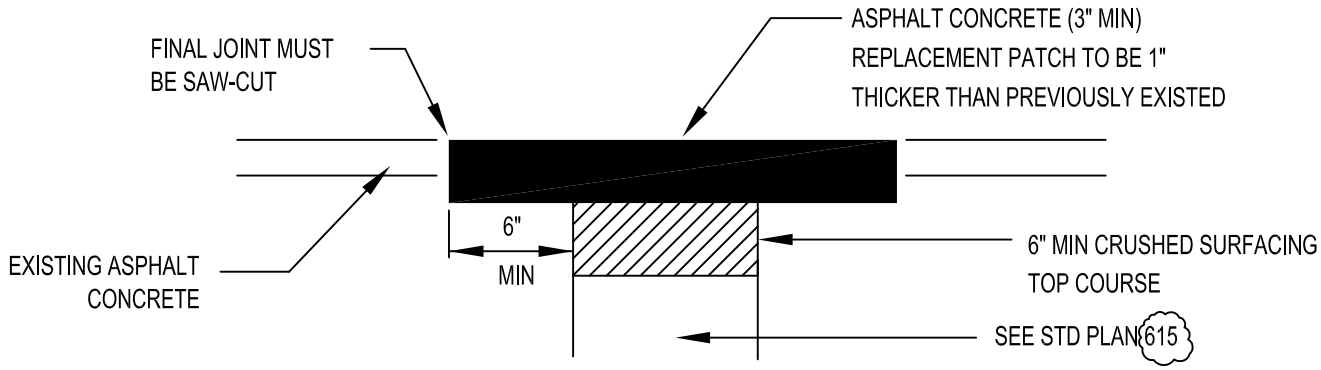

EXISTING ASPHALT CONCRETE OVER PREPARED GRADE

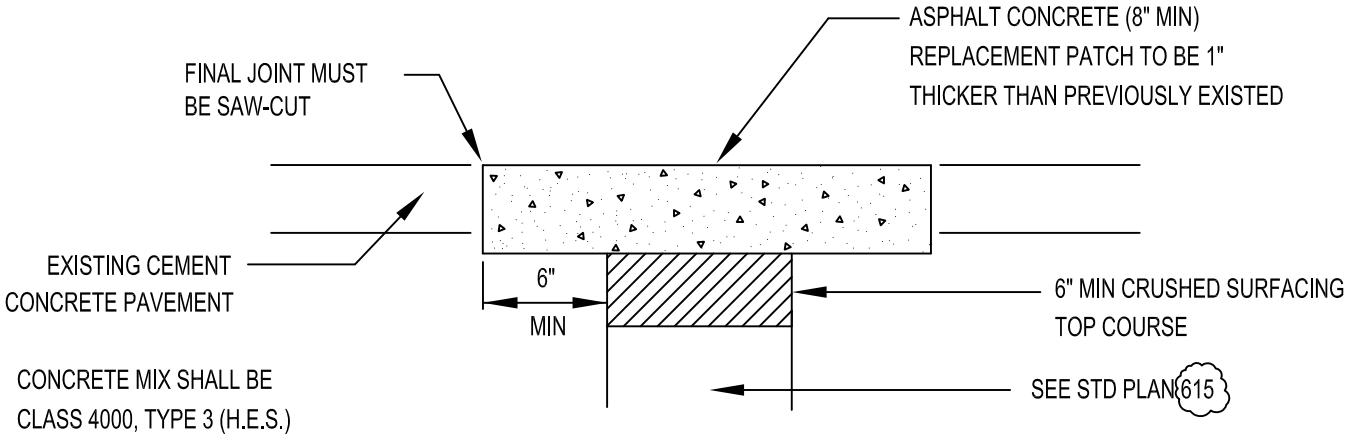

EXISTING CEMENT CONCRETE OVER PREPARED GRADE

NOTES:

1. ALL TRENCHES IN ROADWAY AREAS SHALL BE BACKFILLED AND PATCHED WITH TEMPORARY ASPHALT AT THE END OF EACH WORK DAY, UNLESS PERMISSION IS GRANTED TO DO OTHERWISE BY THE CITY ENGINEER,
2. ALL TEMPORARY PATCHES ON TRENCHES SHALL BE PERMANENTLY PATCHED WITHIN 2 WEEKS OF COMPLETION OF WORK WITHIN THE ROADWAY AREA.

SNOHOMISH WASHINGTON	**PAVEMENT PATCHING DETAILS**	Approved By: Yosh Monzaki City Engineer Date: Aug 15, 2016	**316** Number
	City of Snohomish Public Works Department		

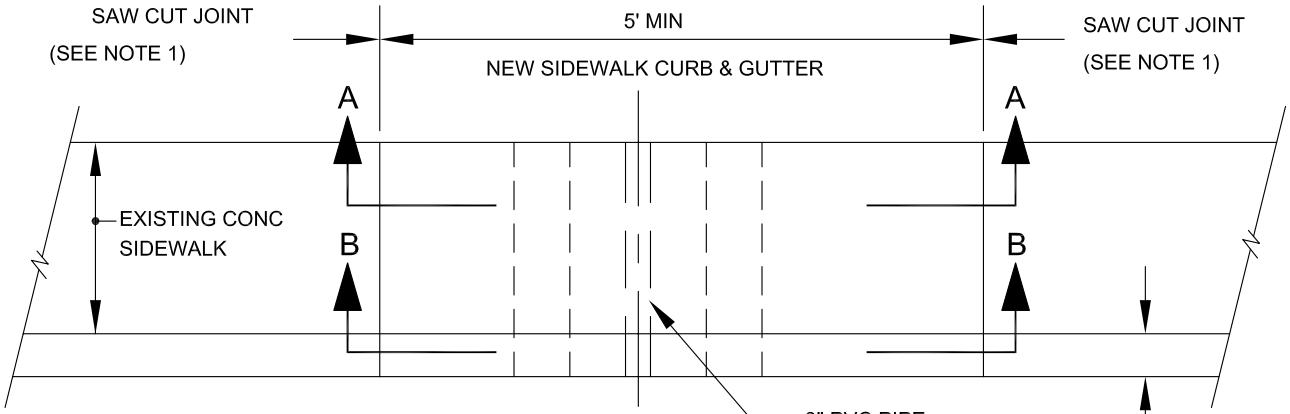

PLAN

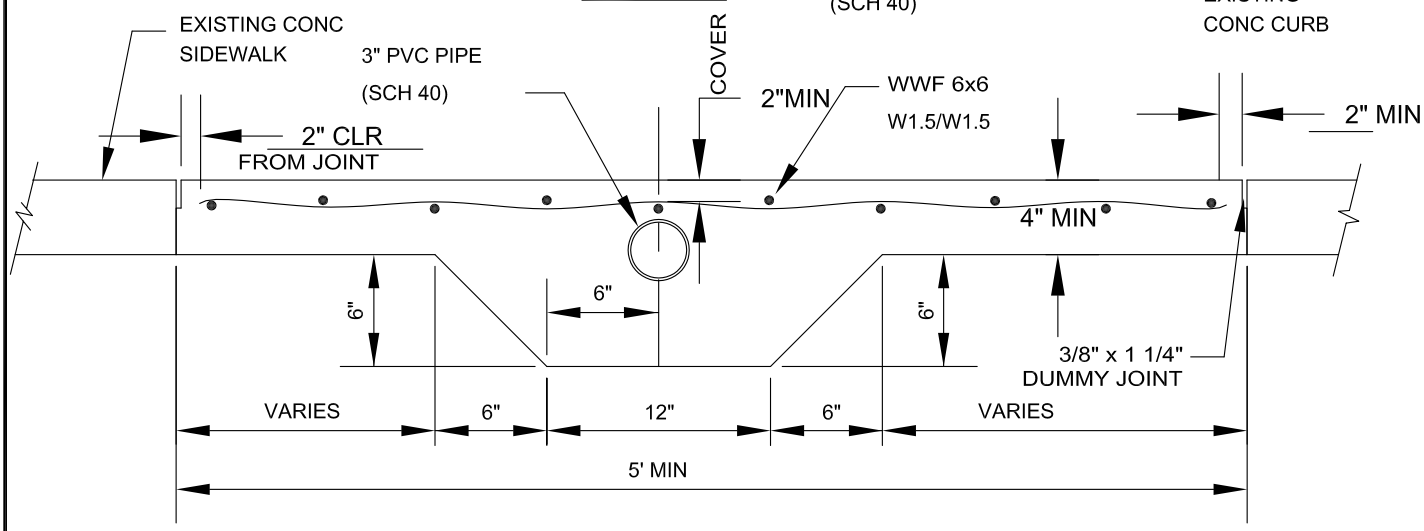

SIDEWALK SECTION A-A

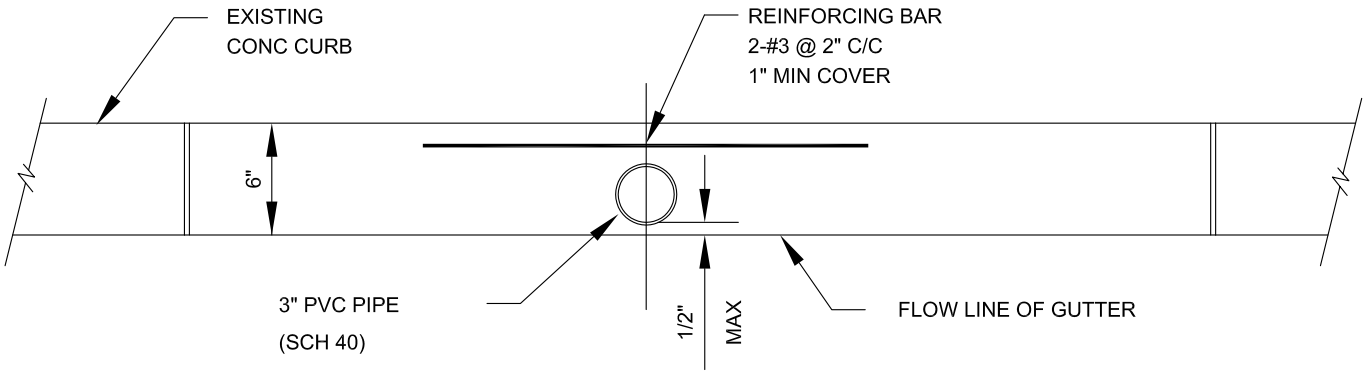

CURB SECTION B-B

NOTES:

1 SIDEWALK AND CURBING MUST BE SAW-CUT AT A DUMMY JOINT OR FULL EXPANSION JOINT.

2 FULL DEPTH OF CURB AND GUTTER MUST BE REMOVED AND REPLACED.

3 ALL NEW CURB, GUTTER AND SIDEWALK SHALL BE CLASS 3000 CEMENT CONCRETE.

SNOHOMISH WASHINGTON	**RESIDENTIAL SIDEWALK DRAIN**	Approved By: City Engineer Date: May 30, 2004	319 Number
	City of Snohomish Public Works Department		

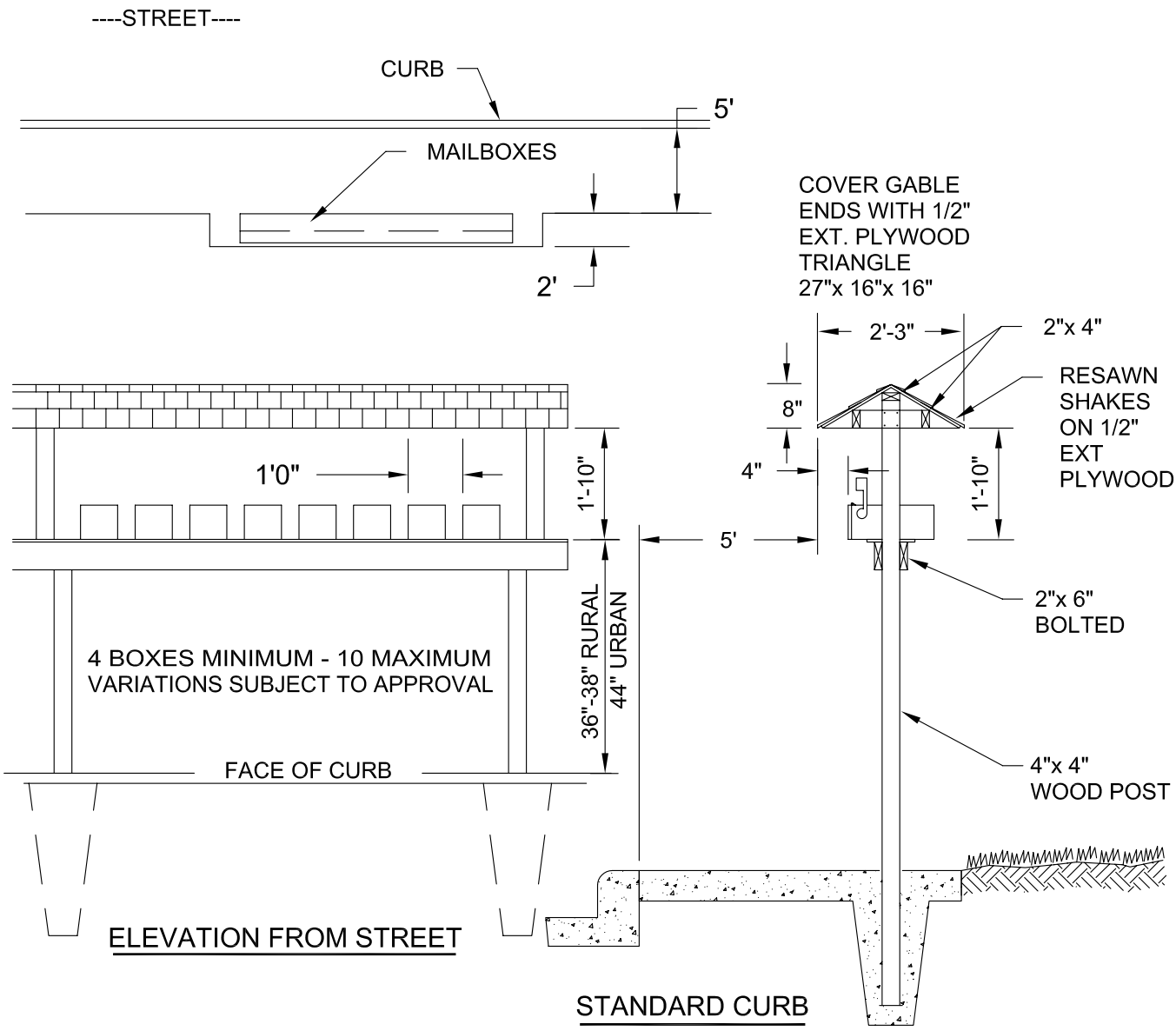

NOTES:

1. MAILBOX MUST BE TYPE "APPROVED BY THE POSTMASTER GENERAL" WITH A UNIFORM BOX STYLE AND METHOD OF ADDRESS IDENTIFICATION PER EACH STANDARD.

2. LOCATION IS SUBJECT TO APPROVAL BY THE CITY FOR PROTECTION OF VIEWS AND ACCESS AND IS TO BE SHOWN ON STREET IMPROVEMENT PLANS.

3. THE SKETCH DEPICTS A MINIMUM STRUCTURAL AND DIMENSIONAL STANDARD. INNOVATIVE DESIGNS MEETING THE MINIMUM DIMENSIONAL AND STRUCTURAL REQUIREMENTS ARE ACCEPTABLE.

4. ALL WOOD TO BE PRESSURE TREATED FIR OR HEMLOCK.

SNOHOMISH WASHINGTON	**MAILBOX STRUCTURE INSTALLATION**	Approved By: City Engineer Date: May 30, 2004	**320** Number
	City of Snohomish Public Works Department		

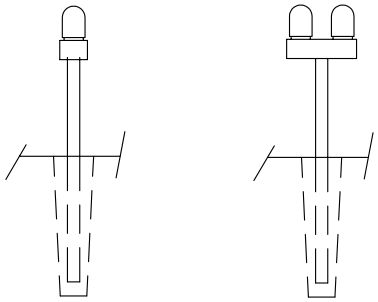

TYPICAL CONFIGURATIONS

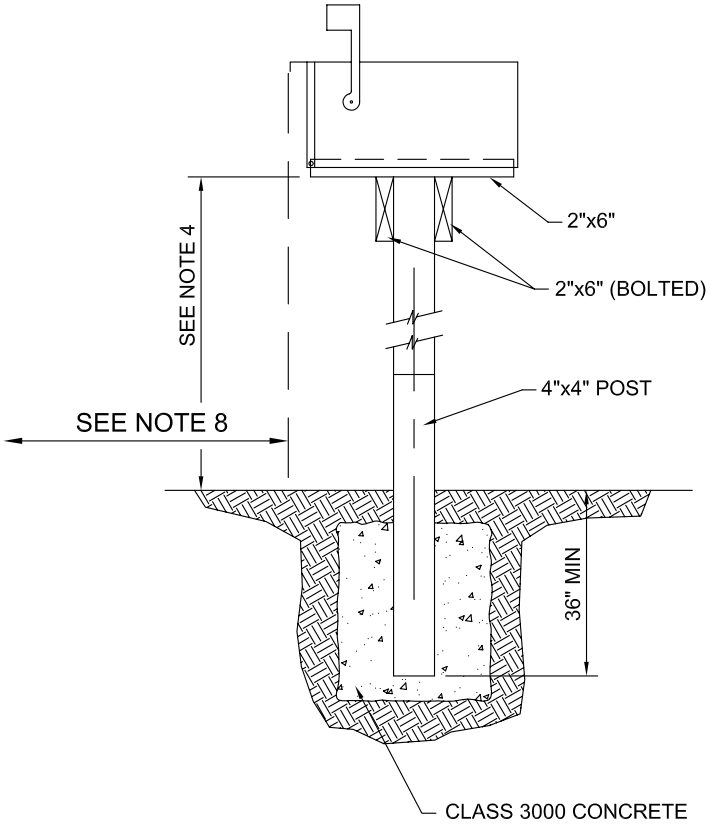

TYPICAL SECTION

NOTES

1. FOR 1 OR 2 MAILBOXES PER STRUCTURE USE SINGLE 4"x4" POST. FOR 3 OR MORE MAILBOXES SEE STD DWG 320 OR 321.
2. ALL WOOD TO BE PRESSURE TREATED FIR OR HEMLOCK.
3. FOR ALTERNATE MAILBOX MOUNTINGS SEE STANDARD DWG 320.
4. MAILBOX HEIGHT VARIES ACCORDING TO THE TYPE OF DELIVERY VEHICLE. WHERE MAIL DELIVERY IS ACCOMPLISHED BY MAIL TRUCKS ("MOUNTED" ROUTES) THE MAILBOX HEIGHTS SHALL BE 44". WHERE MAIL DELIVERY IS ACCOMPLISHED BY PASSENGER VEHICLE ("RURAL" ROUTES) THE MAILBOX HEIGHT SHALL BE 36" TO 38".
5. MAILBOXES MUST BE POSTMASTER APPROVED WITH A UNIFORM BOX STYLE AND METHOD OF ADDRESS IDENTIFICATION.
6. LOCATIONS OF MAILBOXES ARE SUBJECT TO APPROVAL BY THE CITY ENGINEER FOR PROTECTION OF VIEWS AND ACCESS.
7. THIS DRAWING DEPICTS A MINIMUM STRUCTURAL AND DIMENSIONAL STANDARD. INNOVATIVE DESIGNS MEETING OR EXCEEDING THIS MINIMUM STANDARD MUST BE APPROVED BY THE CITY ENGINEER.
8. ALL MAILBOX STRUCTURES SHALL BE PLACED BACK OF SIDEWALK WITH NO PORTION OF THE BOX OR STRUCTURE PROTRUDING INTO THE SIDEWALK. IF NO SIDEWALK EXISTS SETBACK WILL BE SET BY THE CITY ENGINEER.

SNOHOMISH WASHINGTON	**MAILBOX STRUCTURE FOR ONE OR TWO BOXES**	Approved By: City Engineer Date: May 30, 2004	**320a** Number
	City of Snohomish Public Works Department		

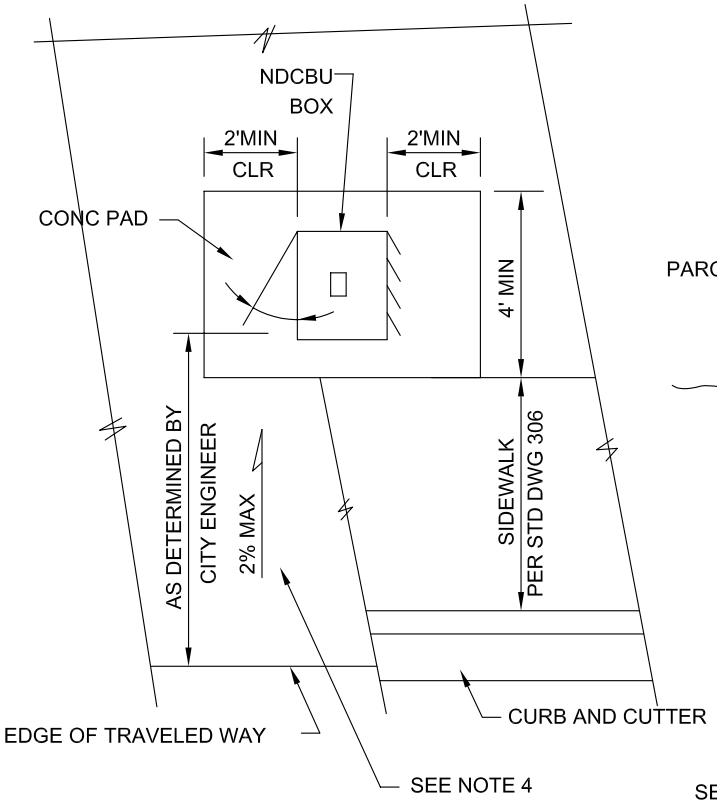

SETBACK PLAN

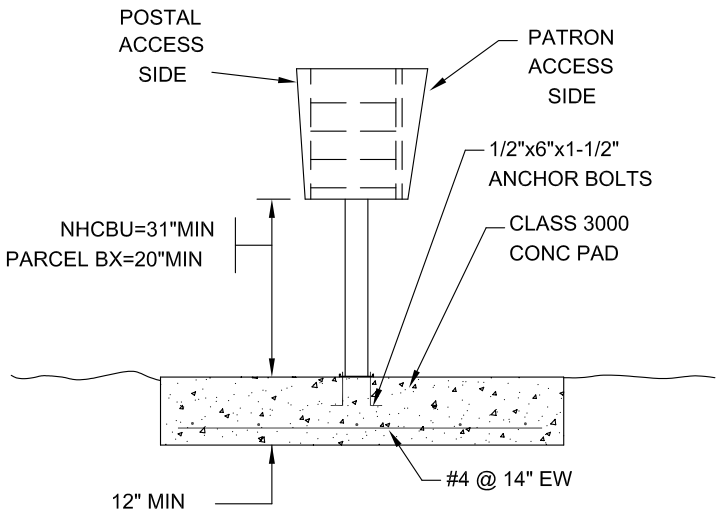

FRONT ELEVATION

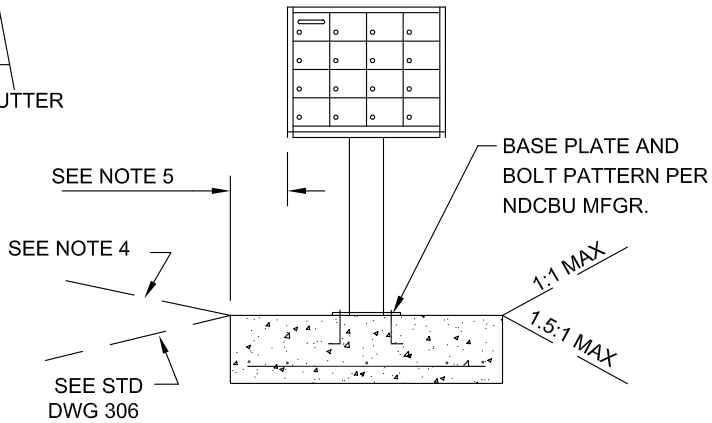

SIDE ELEVATION

NOTES:

1. THIS DRAWING DEPICTS A MINIMUM STRUCTURAL AND DIMENSIONAL STANDARD FOR NEIGHBORHOOD DELIVERY & COLLECTION BOX UNIT (NDCBU) AND PADS FOR SPECIFIC POSTAL REQUIREMENTS CONTACT THE POSTMASTER.
2. MAILBOXES MUST BE POSTMASTER APPROVED WITH A UNIFORM BOX STYLE AND METHOD OF ADDRESS IDENTIFICATION.
3. LOCATIONS OF MAILBOXES ARE SUBJECT TO APPROVAL BY THE CITY ENGINEER FOR PROTECTION OF VIEWS AND ACCESS.
4. INSTALLATION OF DRAINAGE CULVERT MAY BE NECESSARY IN AREAS WHERE THERE IS NO CONCRETE SIDEWALK AND THE REQUIRED SETBACK SPANS A ROADSIDE DITCH. ACCESS TO SUCH STRUCTURES WILL HAVE A MAX. SLOPE OF 2%. AND SHALL HAVE A PAD CONSISTING OF A MINIMUM OF 2" OF CRUSHED SURFACING TOP COURSE COMPACTED TO 95% MAXIMUM DENSITY.
5. ALL MAILBOX STRUCTURES SHALL BE PLACED BACK OF SIDEWALK WITH NO PORTION OF BOX OR STRUCTURE PROTRUDING INTO THE SIDEWALK. IF NO SIDEWALK EXISTS SETBACK WILL BE SET BY THE CITY ENGINEER.
6. SUGGESTED SOURCE SECURITY MFG CORP (800) 762-6937, 8000 SERIES PEDESTAL BOXES, SALSBURY INDUSTRIES (800) 323-3003 OR POSTAL APPROVED EQUAL.
7. PLACEMENT LOCATION OF PEDESTAL PARCEL LOCKER WILL BE APPROVED BY THE CITY ENGINEER AND THE POSTAL SERVICE.

SNOHOMISH WASHINGTON	**NDCBU MAILBOX CLUSTER**	Approved By: City Engineer Date: May 30, 2004	**321a** Number
	City of Snohomish Public Works Department		

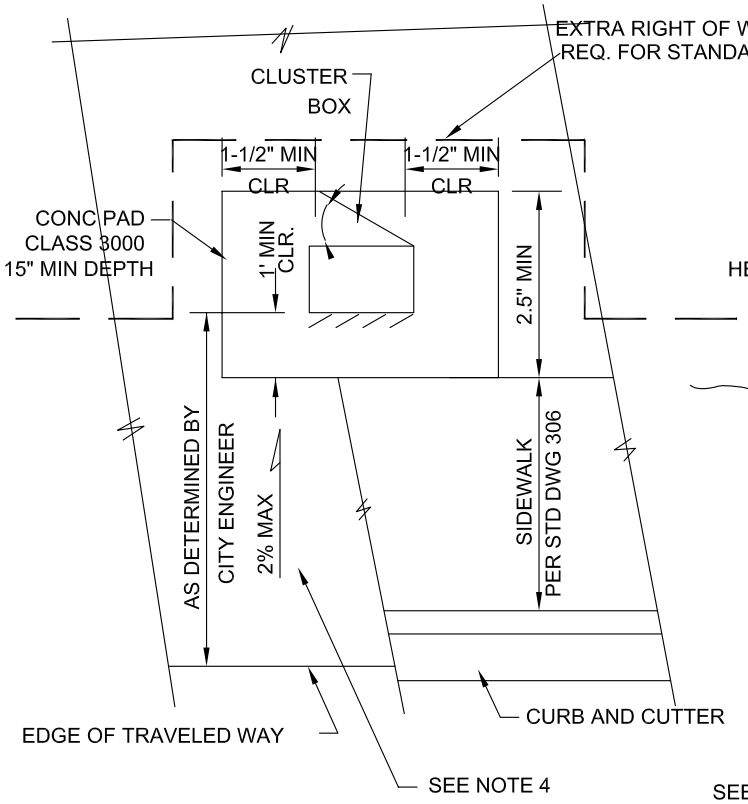

SETBACK PLAN

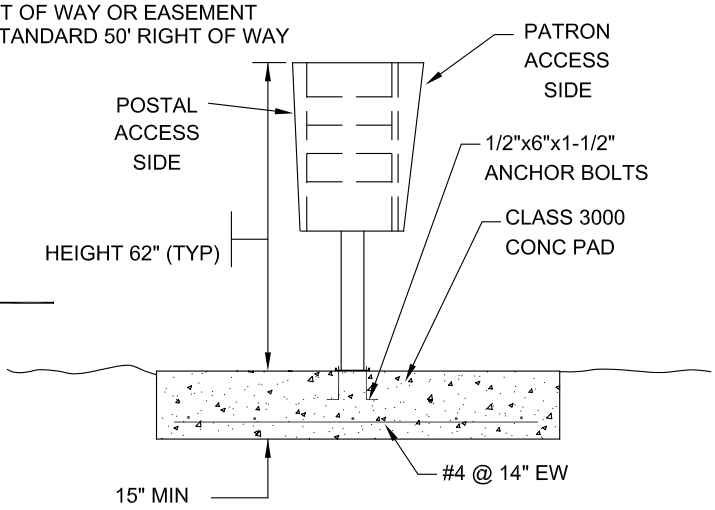

FRONT ELEVATION

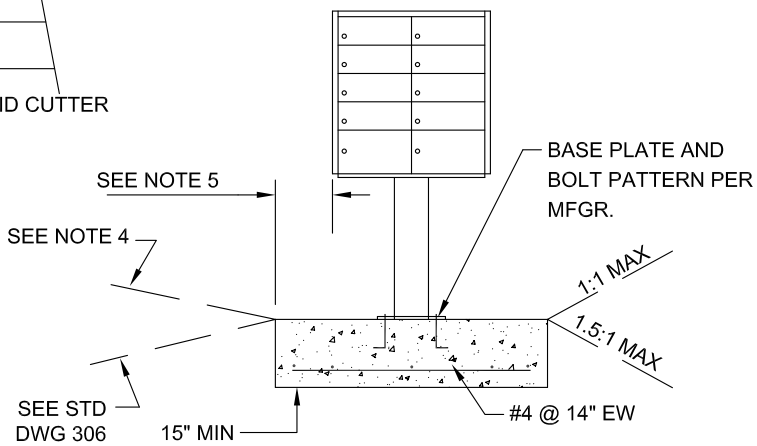

SIDE ELEVATION

NOTES:

1. THIS DRAWING DEPICTS A MINIMUM STRUCTURAL AND DIMENSIONAL STANDARD FOR NEIGHBORHOOD CLUSTER MAILBOX UNIT AND PADS. FOR SPECIFIC POSTAL REQUIREMENTS CONTACT THE POSTMASTER.
2. MAILBOXES MUST BE POSTMASTER APPROVED WITH A UNIFORM BOX STYLE AND METHOD OF ADDRESS IDENTIFICATION.
3. LOCATIONS OF MAILBOXES ARE SUBJECT TO APPROVAL BY THE CITY ENGINEER FOR PROTECTION OF VIEWS AND ACCESS.
4. INSTALLATION OF DRAINAGE CULVERT MAY BE NECESSARY IN AREAS WHERE THERE IS NO CONCRETE SIDEWALK AND THE REQUIRED SETBACK SPANS A ROADSIDE DITCH. ACCESS TO SUCH STRUCTURES WILL HAVE A MAX. SLOPE OF 2%. AND SHALL HAVE A PAD CONSISTING OF A MINIMUM OF 2" OF CRUSHED SURFACING TOP COURSE COMPACTED TO 95% MAXIMUM DENSITY.
5. ALL MAILBOX STRUCTURES SHALL BE PLACED BACK OF SIDEWALK WITH NO PORTION OF BOX OR STRUCTURE PROTRUDING INTO THE SIDEWALK. IF NO SIDEWALK EXISTS SETBACK WILL BE SET BY THE CITY ENGINEER.
6. SUGGESTED SOURCE SECURITY MFG CORP (800) 762-6937, 800 SERIES CLUSTER BOX UNITS, SALSBURY INDUSTRIES (800) 323-3003 OR POSTAL APPROVED EQUAL.
7. PLACEMENT LOCATION OF PEDESTAL PARCEL LOCKER WILL BE APPROVED BY THE CITY ENGINEER AND THE POSTAL SERVICE.

SNOHOMISH WASHINGTON	**CLUSTER MAILBOX UNITS FRONT OPENING ONLY**	Approved By: City Engineer Date: May 30, 2004	**321b** Number
	City of Snohomish Public Works Department		

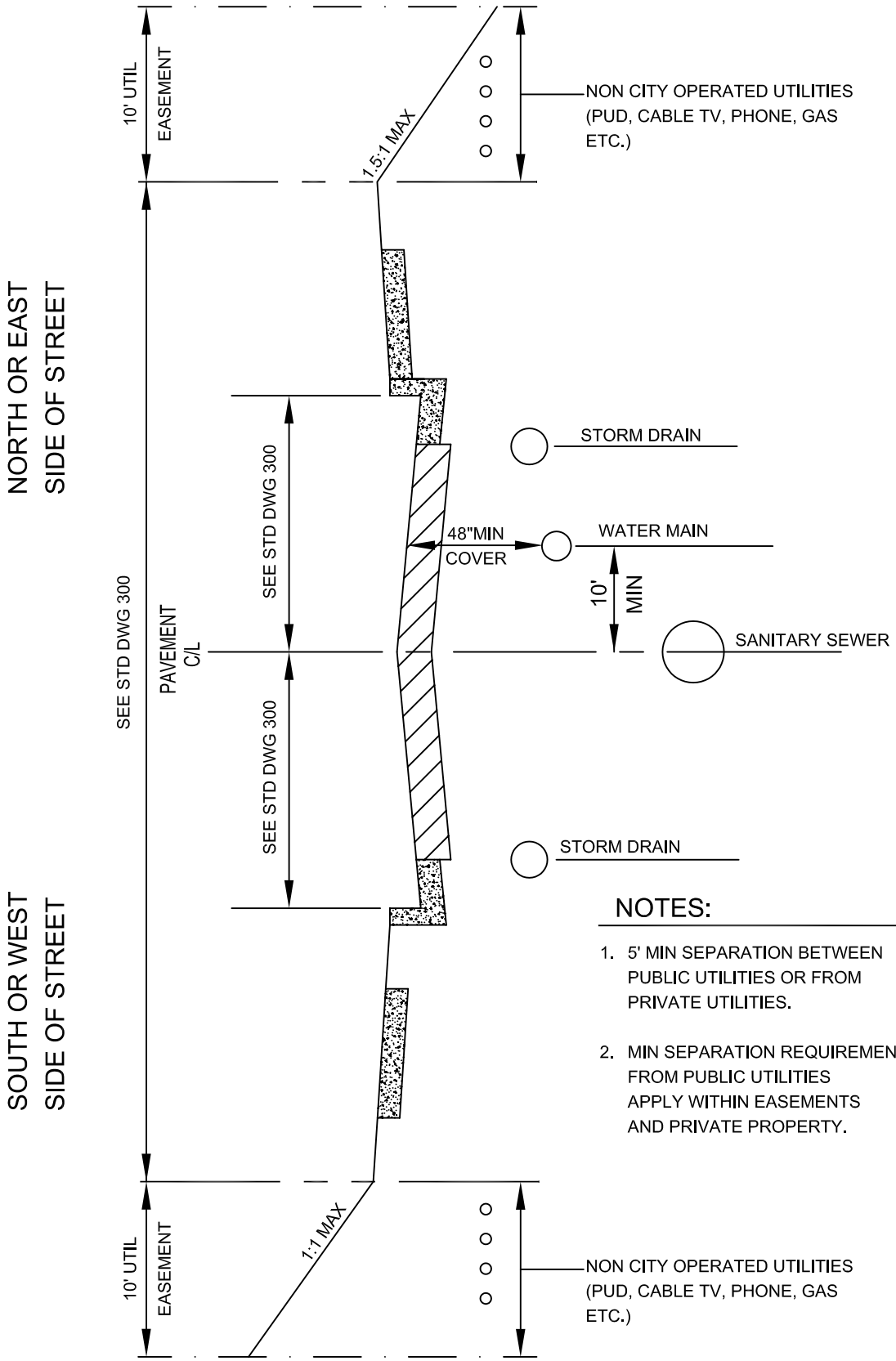

NOTES:

1. 5' MIN SEPARATION BETWEEN PUBLIC UTILITIES OR FROM PRIVATE UTILITIES.
2. MIN SEPARATION REQUIREMENTS FROM PUBLIC UTILITIES APPLY WITHIN EASEMENTS AND PRIVATE PROPERTY.

SNOHOMISH WASHINGTON

TYPICAL UTILITY LOCATIONS

Approved By:
City Engineer
Date: May 30, 2004

322
Number

City of Snohomish Public Works Department

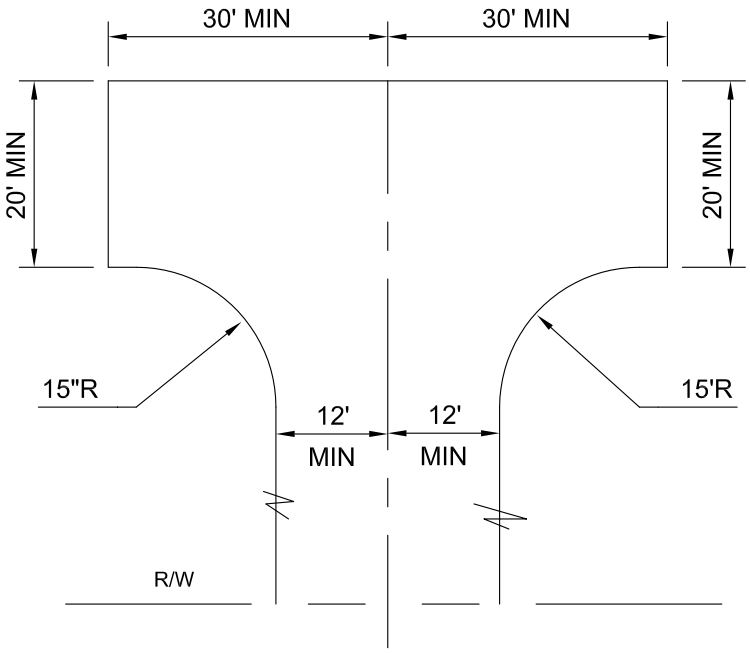

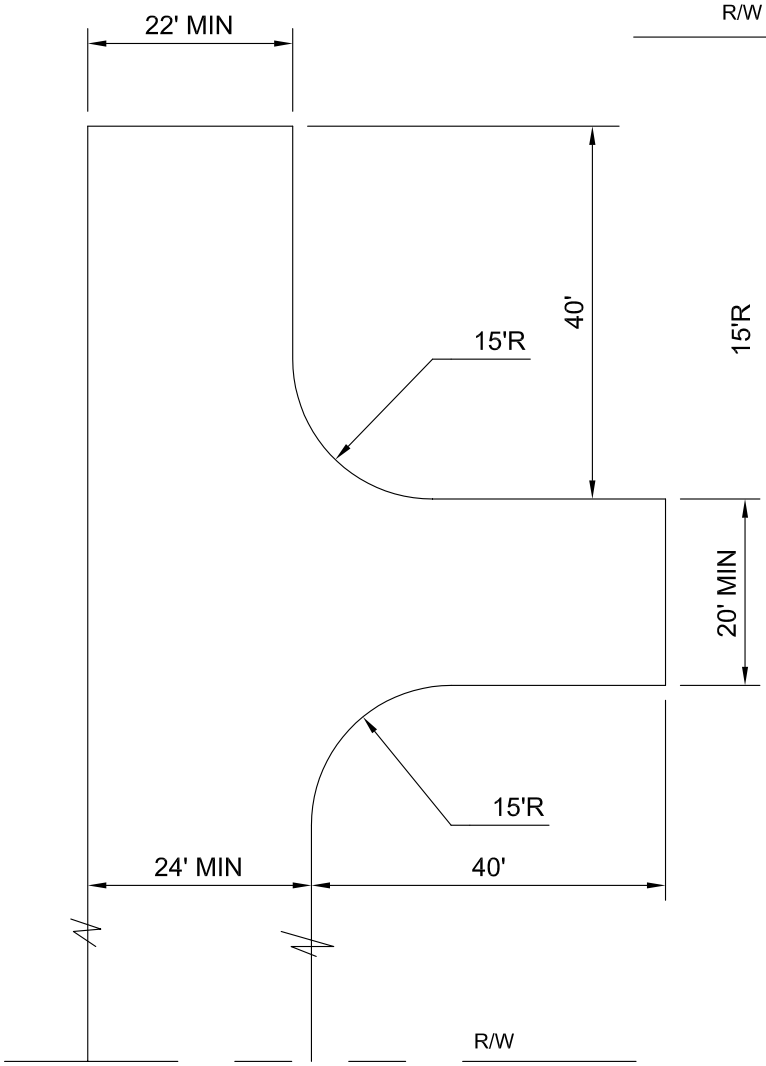

SNOHOMISH WASHINGTON	**TEMPORARY TURNAROUNDS**	Approved By: City Engineer Date: May 30, 2004	**323** Number
	City of Snohomish Public Works Department		

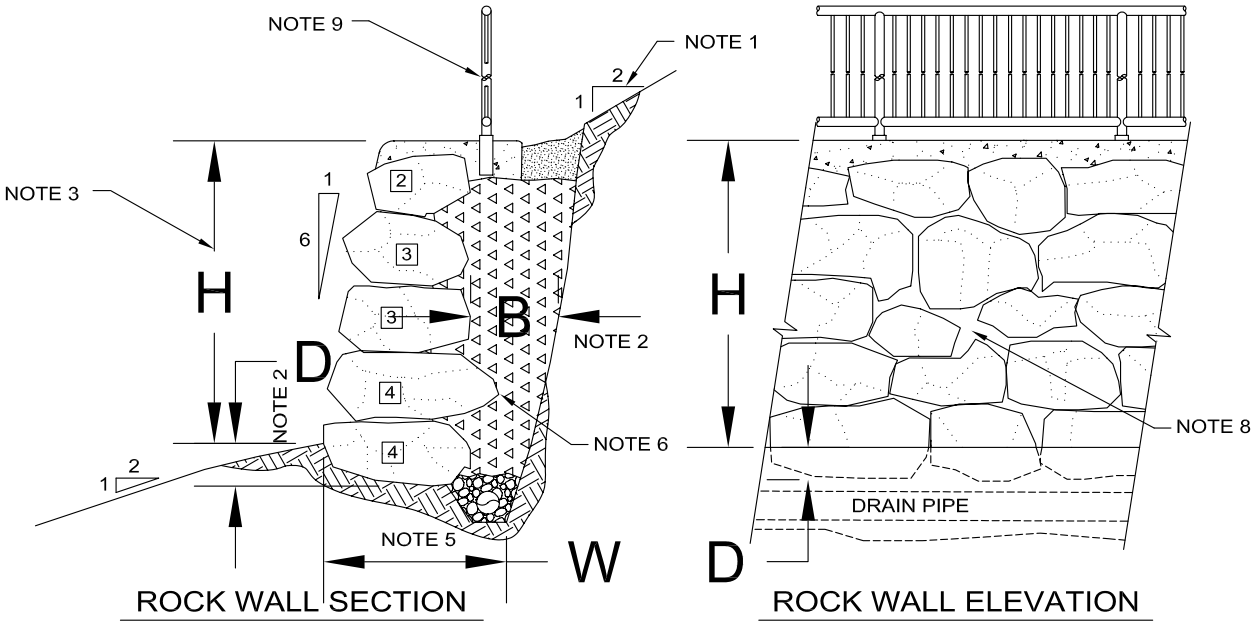

NOTES

1. MAXIMUM INCLINATION OF THE SLOPES ABOVE AND BEHIND ROCK WALL SHALL BE 2:1 (HORIZONTAL:VERTICAL)
2. MINIMUM THICKNESS OF ROCK FILTER LAYER B=12 INCHES. MINIMUM EMBEDMENT D=12 INCHES.
3. MAXIMUM ROCK WALL HEIGHT H=8 FEET. ROCK WALLS GREATER THAN 8 FEET IN HEIGHT SHALL BE DESIGNED BY A CIVIL ENGINEER LICENSED IN THE STATE OF WASHINGTON.
4. ROCK SHALL BE PLACED TO GRADUALLY DECREASE IN SIZE WITH INCREASING WALL HEIGHT.
5. MINIMUM WIDTH OF KEYWAY EXCAVATION W, SHALL BE EQUAL TO THE THICKNESS OF THE BASE ROCK PLUS B (ROCK FILTER)
6. THE LONG DIMENSION OF THE ROCKS SHALL EXTEND BACK TOWARDS THE CUT OR FILL FACE TO PROVIDE MAXIMUM STABILITY.
7. WHENEVER POSSIBLE EACH ROCK SHALL BEAR ON TWO OR MORE ROCKS BELOW IT, WITH GOOD FLAT-TO-FLAT CONTACT.
8. WHERE VOIDS OF GREATER THAN 6 INCHES IN DIMENSIONS EXIST IN THE ROCK FACE AND THERE IS NO ROCK CONTACT WITHIN THE ROCK WALL THICKNESS, THE VOID SHALL BE CHINKED WITH SMALL PIECES OF ROCK.
9. ROCKERIES WHICH ARE MORE THAN 30 INCHES ABOVE GRADE OR FLOOR BELOW SHALL BE PROTECTED BY GUARDRAIL SUCH AS A ORNAMENTAL OR PEDESTRIAN RAIL. TYPE TO BE DETERMINED BY THE CITY ENGINEER, SEE DWGS 325 & 326
10. FOR DESIGN LOCATION AND UNDERGROUND UTILITY LIMITATIONS REFEER TO STD DWG 324B.

NOTES (CONT)

11. THE DENSITY OF ROCK MATERIAL SHALL BE A MINIMUM OF 155 PCF. THE SIZE CATEGORIES FOR ROCK SHALL BE AS FOLLOWS:

SIZE	APPROXIMATE WEIGHT - LBS.	APPROXIMATE DIAMETER-INCHES
1 MAN	50 -200	12 - 18
2 MAN	200 -700	18 - 28
3 MAN	700 - 2000	28 - 36
4 MAN	2000 - 4000	36 - 48
5 MAN	4000 - 6000	48 - 54
6 MAN	6000 - 8000	54 - 60

LEGEND

DRAINAGE MATERIALS TO CONSIST OF CLEAN 4"-2" ANGULAR SPALLS.

NO. 2 COARSE AGGREGATE PER WSDOT/APWA 9-03.1(3)C (6" ABOVE PIPE MIN)

CONCRETE ROCKERY CAP. REQUIRED IN R.O.W., OPTIONAL ON PRIVATE PROPERTY.

UNDISTURBED FIRM NATIVE SOIL

SEED OR SOD ON 12" OF TOPSOIL WITH UNDERLAYER OF FILTER FABRIC.

4 INCH DIAMETER, HDPE OR SDR35 PVC, PERFORATED OR SLOTTED, WITH SMOOTH INTERIOR PIPE. SET SLIGHTLY LOWER THAN THE BASE ROCK TO PREVENT DAMAGE. LAY WITH A POSITIVE SLOPE TO DISCHARGE AWAY FROM ROCKERY.

4 — DESIGNATES SIZE OF ROCK, I.E. 4 MAN. SEE NOTE 11.

SNOHOMISH WASHINGTON

ROCKERY

(DESIGN AND CONSTRUCTION REQUIREMENTS)

Approved By: City Engineer

Date: May 30, 2004

324a Number

City of Snohomish Public Works Department

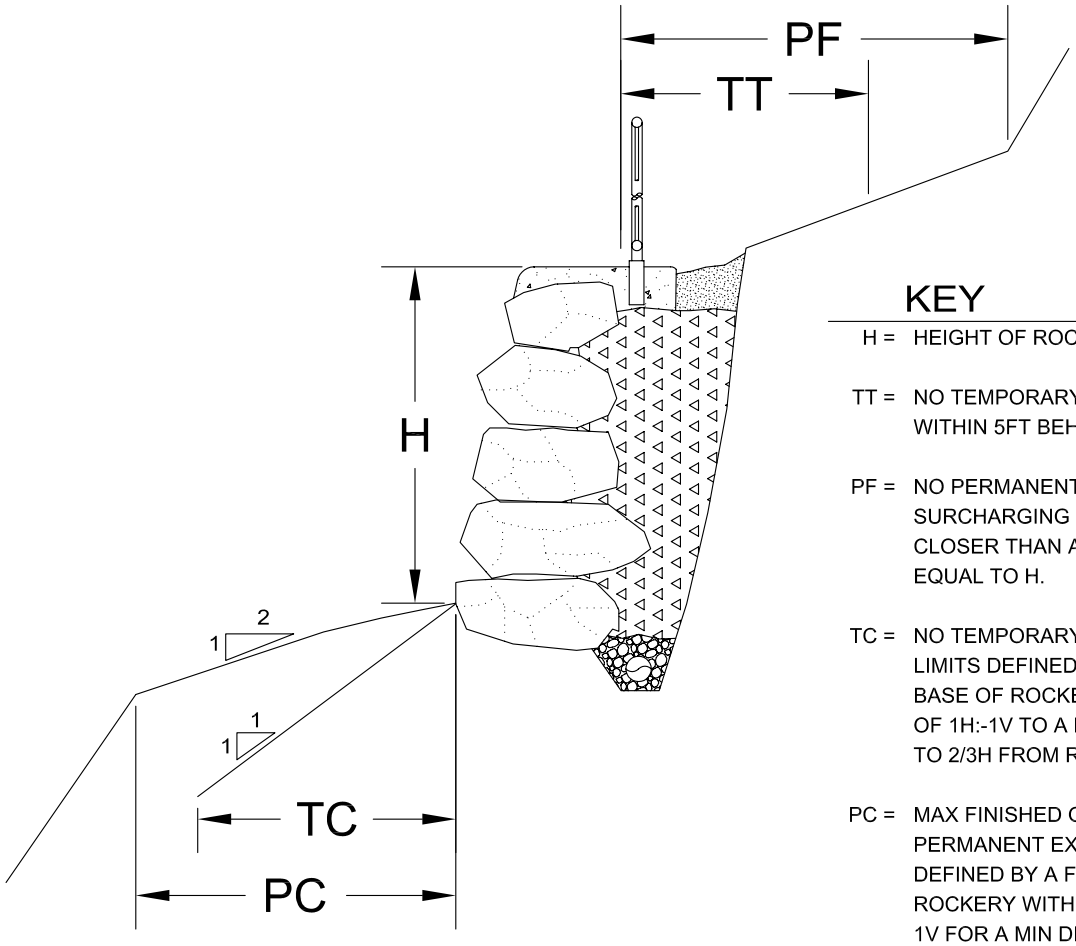

KEY

H = HEIGHT OF ROCK WALL.

TT = NO TEMPORARY EXCAVATION WITHIN 5FT BEHIND ROCKERY.

PF = NO PERMANENT EXCAVATION OR SURCHARGING BEHIND ROCKERY CLOSER THAN A DISTANCE EQUAL TO H.

TC = NO TEMPORARY EXCAVATION BELOW LIMITS DEFINED BY A LINE FROM BASE OF ROCKERY WITH A SLOPE OF 1H:-1V TO A DISTANCE EQUAL TO 2/3H FROM ROCKERY BASE.

PC = MAX FINISHED GRADE OR PERMANENT EXCAVATION DEFINED BY A FROM BASE OF ROCKERY WITH A SLOPE OF 2H:-1V FOR A MIN DISTANCE EQUAL TO H FROM ROCKERY BASE.

DESIGN AND POST CONSTRUCTION LIMITATIONS

NOTES

1. ALL NEW ROCKERY DESIGN AND PLACEMENT WILL FOLLOW TO CONSTRUCTION LIMITATIONS DESCRIBE ABOVE, AND FOLLOW THE GUIDELINES ESTABLISHED BY THE ASSOCIATED ROCKERY CONTRACTORS "STANDARD ROCK WALL CONSTRUCTION GUIDELINES" DATED 12/2/92 INCLUDING ANY AND ALL REVISIONS.

2. MODIFICATIONS TO OR PLACEMENT OF SUBSEQUENT UNDERGROUND UTILITIES WILL ALSO FOLLOW LIMITATIONS DESCRIBED ABOVE.

SNOHOMISH WASHINGTON	**ROCKERY** (PLACEMENT & POST CONSTRUCTION LIMITS)	Approved By: City Engineer Date: May 30, 2004	**324b** Number
	City of Snohomish Public Works Department		

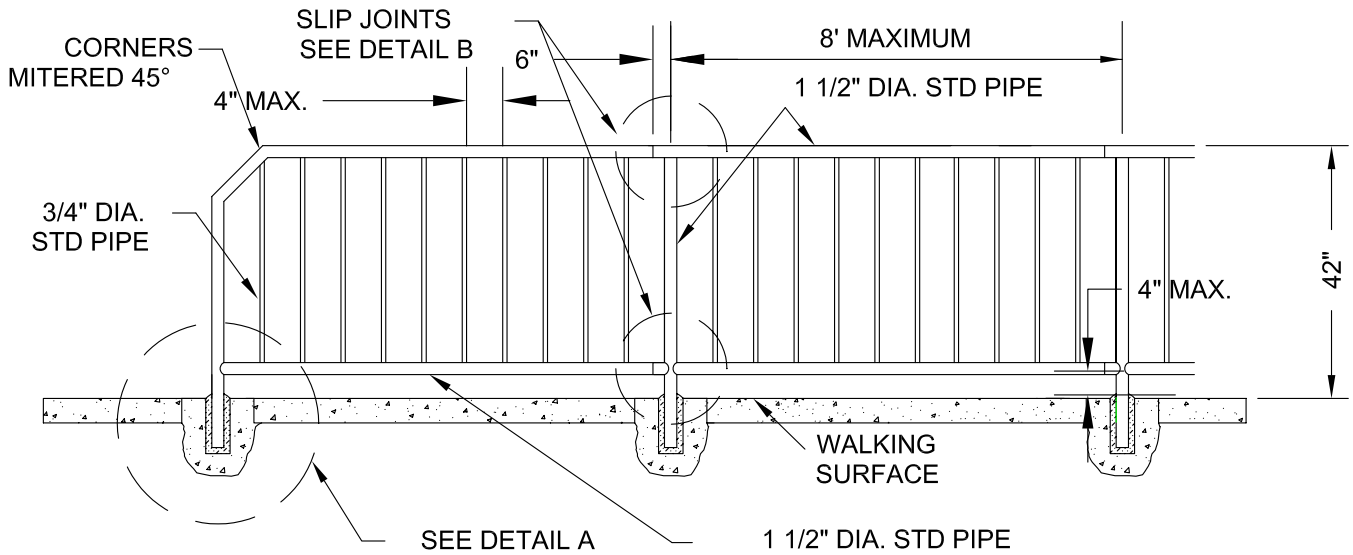

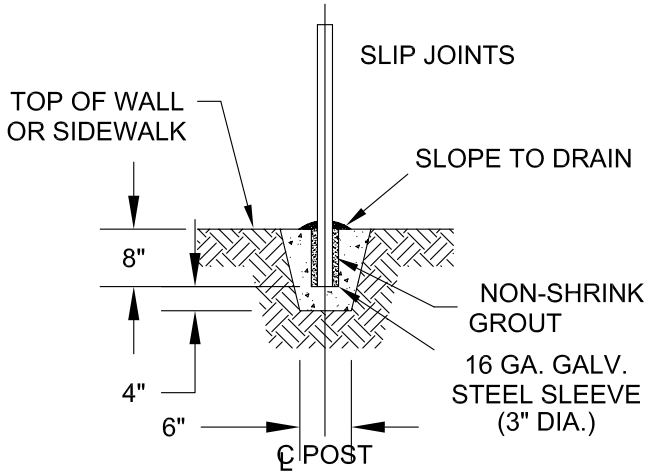

DETAIL A

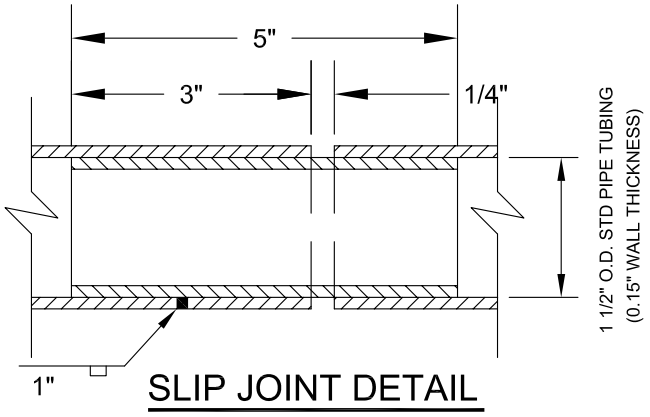

SLIP JOINT DETAIL

DETAIL B

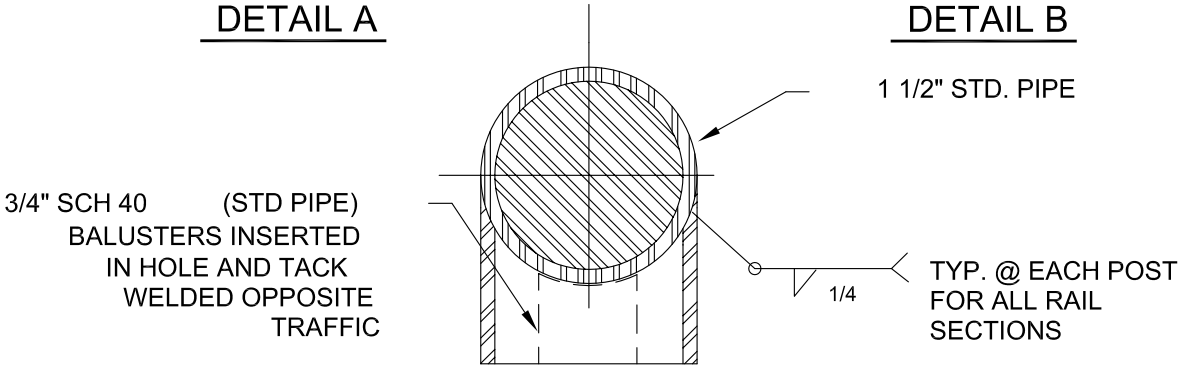

NOTES:

1. MATERIAL FOR PEDESTRIAN HANDRAIL SHALL BE ALUMINUM (ASTM B-429) OR GALVINIZED STEEL (ASTM 120) AS APPROVED BY THE CITY ENGINEER.
2. SEE STANDARD DRAWING No. 325A FOR ADDITIONAL FABRICATION AND SPECIFICATION REQUIREMENTS.
3. PROVIDE SLIP JOINTS AT STAIRWAY EXPANSION JOINTS AND AT EVERY 24 FEET ON CENTER MAXIMUM.

SNOHOMISH WASHINGTON	**PEDESTRIAN HANDRAIL**	Approved By: City Engineer Date: May 30, 2004	**325** Number
	City of Snohomish Public Works Department		

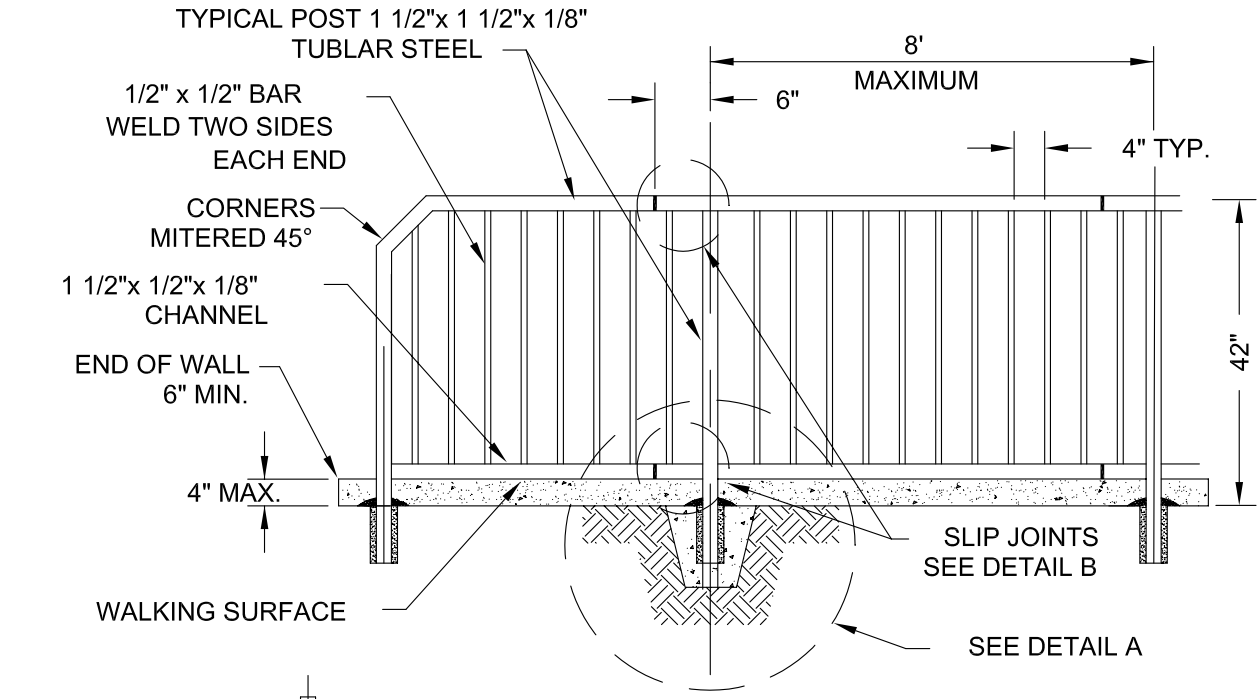

FRONT VIEW

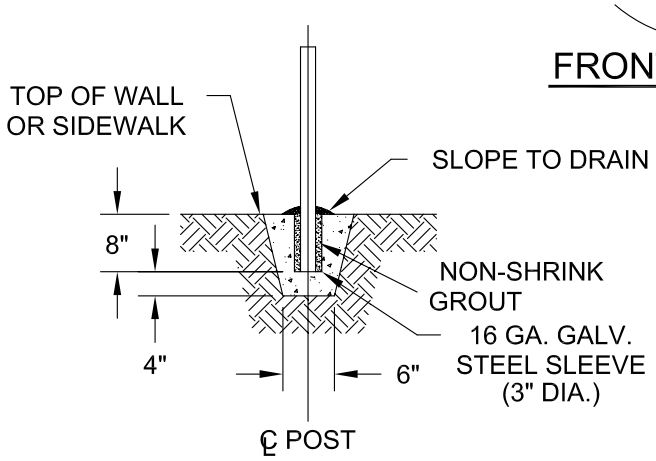

DETAIL A

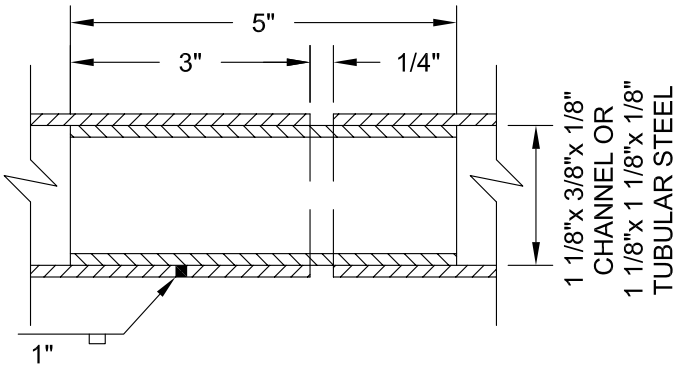

SLIP JOINT DETAIL

DETAIL B

NOTES:

1. ORNAMENTAL RAILING SHALL BE CONSTRUCTED OF STEEL CONFORMING TO ASTM A-120.
2. WELDING SHALL CONFORM TO THE REQUIREMENTS OF THE "STRUCTURAL WELDING CODE" AWS D 1.1.
3. PROVIDE SLIP JOINTS AT STAIRWAY EXPANSION JOINTS AND AT EVERY 24 FEET ON CENTER MAXIMUM.
4. MAXIMUM SPACING OF POSTS SHALL BE 8 FEET ON STRAIGHT ALIGNMENT AND 6 FEET ON CURVED ALIGNMENT LESS THAN 30 FEET RADIUS.
5. AFTER FABRICATION, ALL BURRS AND SHARP EDGES SHALL BE REMOVED.
6. APPLY RUST PROOF METAL PRIME AND ONE COAT OF BLACK ORNAMENTAL IRON METAL PAINT.

SNOHOMISH WASHINGTON	**ORNAMENATL HANDRAIL**	Approved By: City Engineer Date: May 30, 2004	**326** Number
	City of Snohomish Public Works Department		

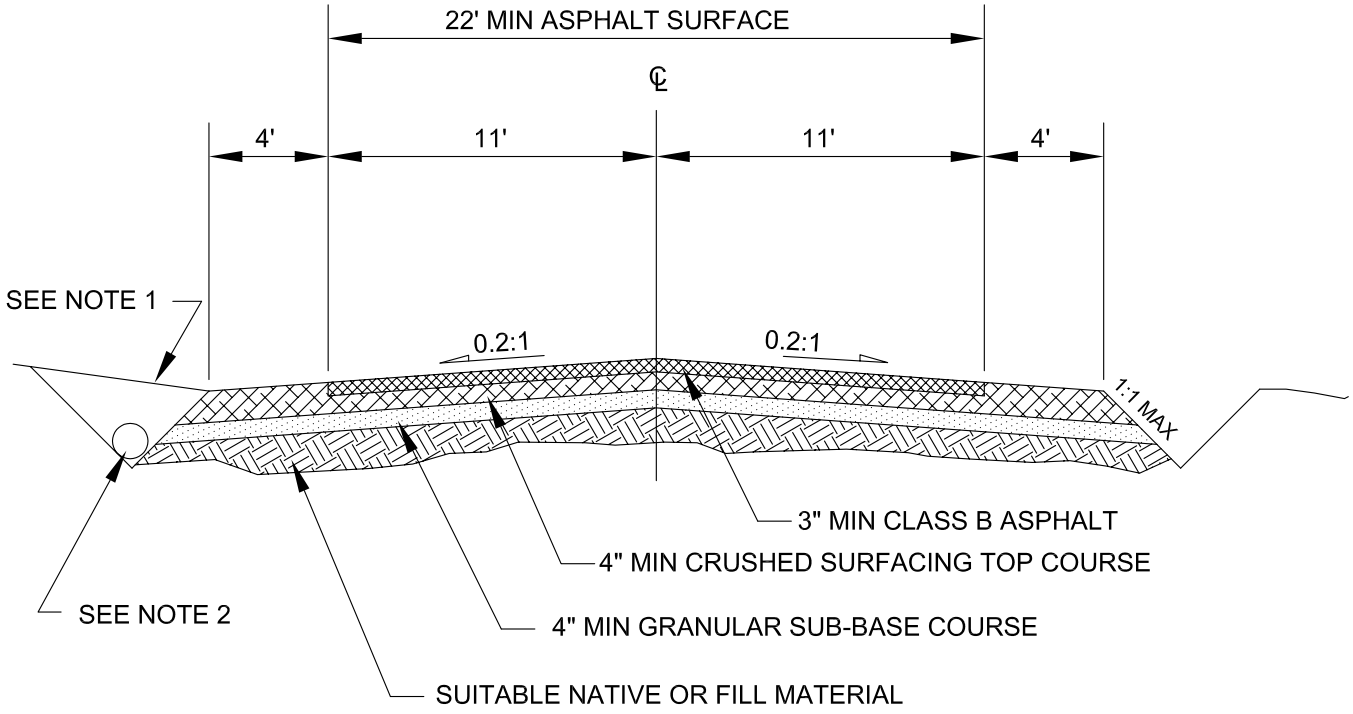

NOTES:

1. DRIVE GRADE AT RIGHT-OF-WAY LINE SHALL CONFORM TO SECTION 3 UNLESS OTHERWISE APPROVED BY CITY ENGINEER.

2. A 12 INCH MINIMUM CONCRETE OR CORRUGATED POLYETHYLENE SMOOTH INTERIOR PIPE IS REQUIRED UNDER ALL DRIVEWAYS.

SNOHOMISH WASHINGTON	**TYPICAL ROADWAY SECTION SPECIAL INTERIM STREET**	Approved By: City Engineer Date: May 30, 2004	327 Number
	City of Snohomish Public Works Department		

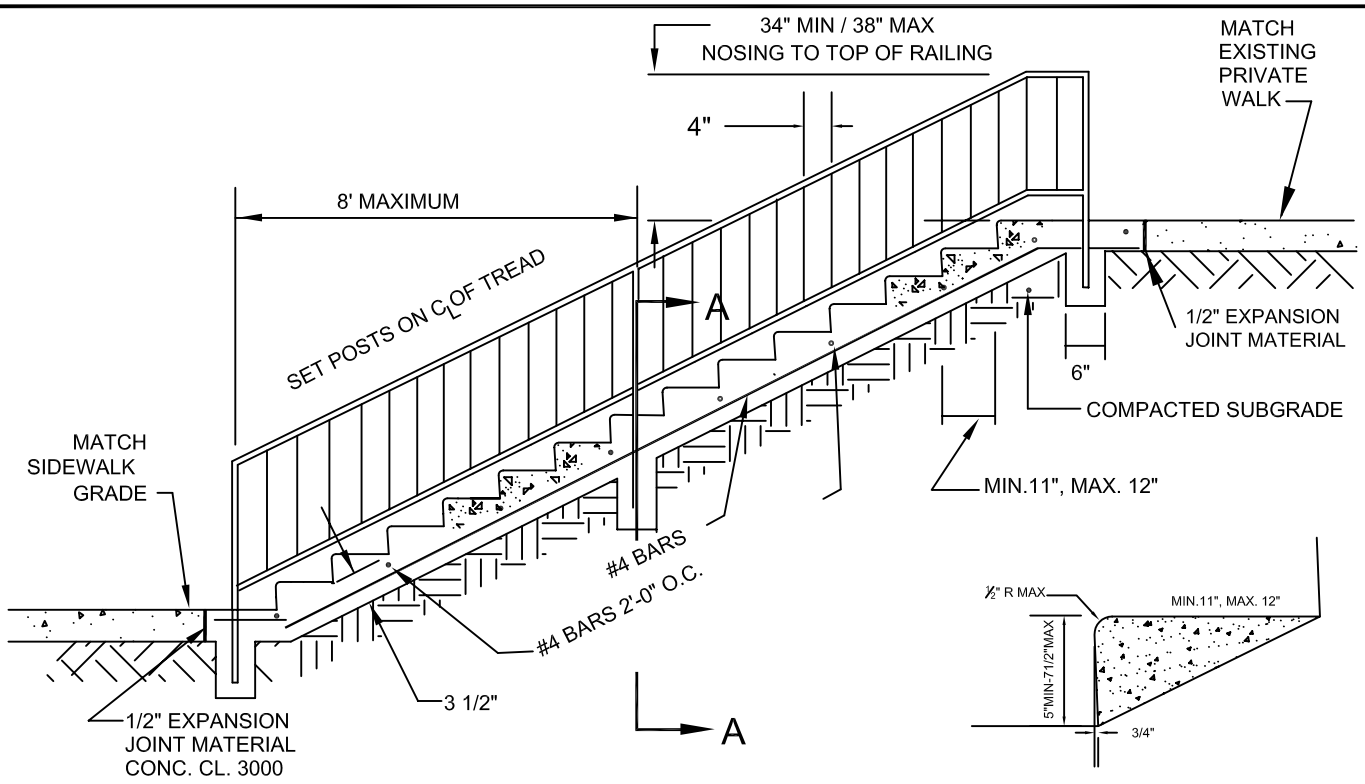

TREAD SHAPE DETAIL

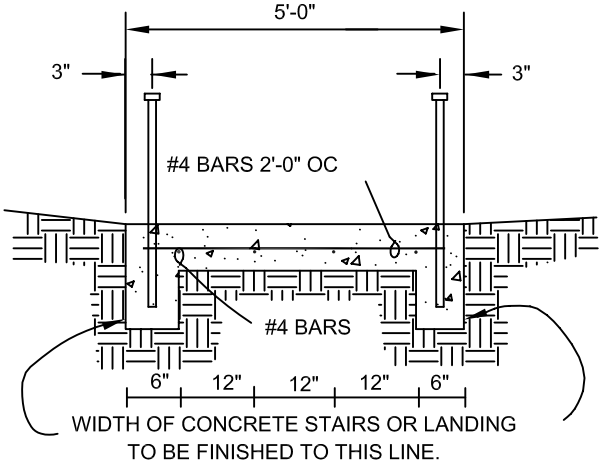

SECTION A-A

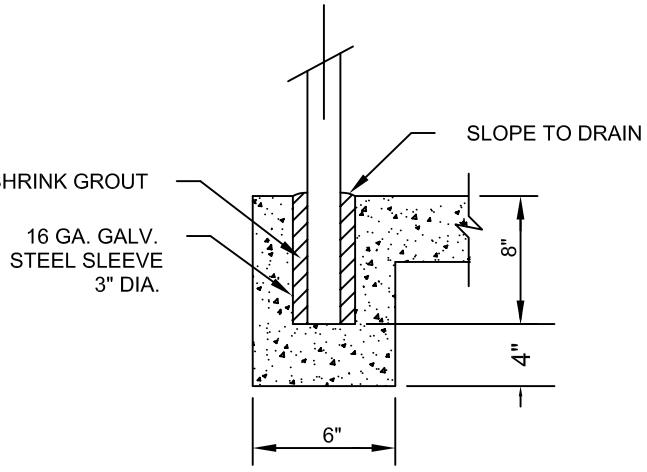

POST DETAIL

NOTES:

1. CEMENT CONCRETE STEPS SHALL BE 4' WIDE, RISERS SHALL BE 5" MIN., 7" MAX. TREAD SHALL BE 11" MIN. 12" MAX.

2. HEIGHT OF RAILING SHALL BE 34" MINIMUM, 38" MAXIMUM TOP OF NOSING TO TOP OF RAILING.

3. USE PEDESTRIAN OR ORNAMENTAL HANDRAIL AS DIRECTED BY THE CITY ENGINEER. SEE STANDARD DRAWING NOS. 325, 325A, AND 326.

4. CLEAR SPACE BETWEEN BALUSTERS SHALL BE A MAXIMUM OF 4".

5. STEPS WITH MORE THAN 4 RISERS SHALL HAVE HANDRAIL ON BOTH SIDES.

SNOHOMISH
WASHINGTON

CEMENT CONCRETE STAIRWAY CONSTRUCTION DETAILS

Approved By:
City Engineer
Date: May 30, 2004

328
Number

City of Snohomish Public Works Department

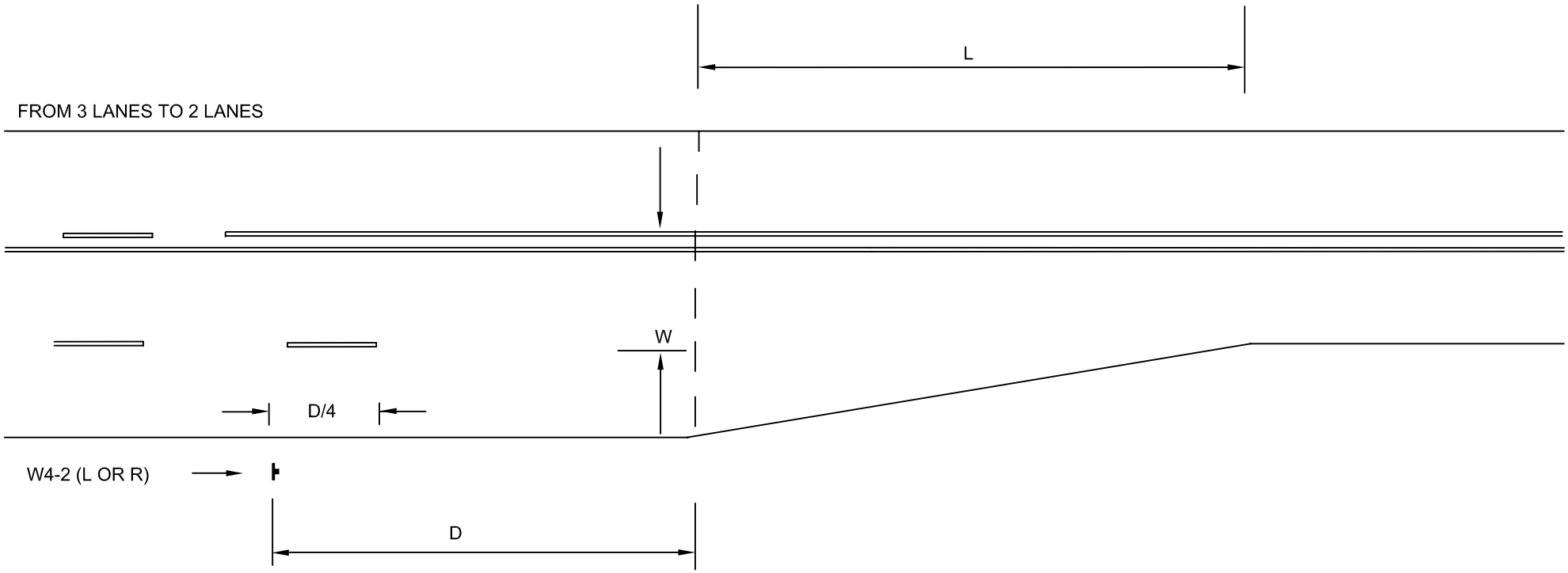

STANDARD:

THE MINIMUM TAPER LENGTH SHALL BE 100 FEET IN URBAN AREAS AND 200 FEET IN RURAL AREAS.

FORMULA WHEN POSTED SPEED IS:

>45 MPH, L=WS.
<45 MPH, $L=WS^2/60$.

VARIABLE LEGEND:

L=LENGTH IN FEET

S=POSTED SPEED OR 85th-PERCENTILE SPEED, WHICHEVER IS GREATER.

W=OFFSET IN FEET

D=ADVANCE WARNING DISTANCE. SEE SECTION 2C.05 OF MUTCD FOR PLACEMENT.

SNOHOMISH WASHINGTON

TYPICAL LANE REDUCTION TRANSITION

Approved By:
City Engineer
Date: May 30, 2004

329
Number

City of Snohomish Public Works Department

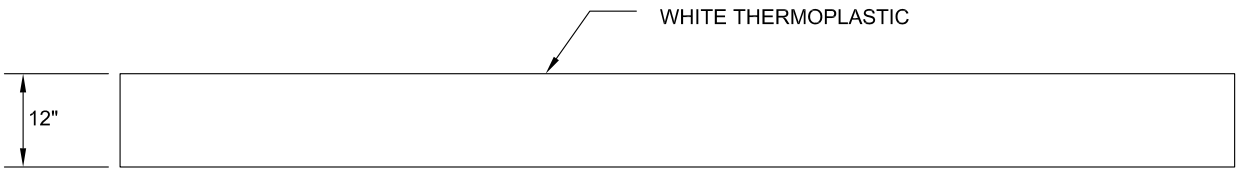

NON-ARTERIAL

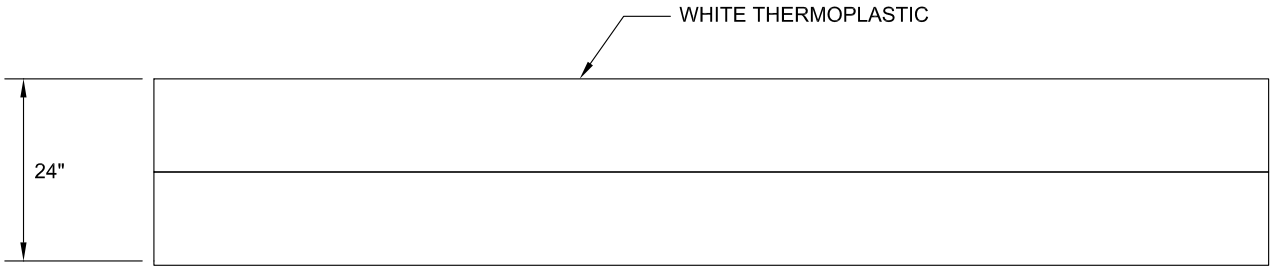

ARTERIAL

SNOHOMISH WASHINGTON	**STOP BARS**	Approved By: City Engineer Date: May 30, 2004	**330** Number
	City of Snohomish Public Works Department		

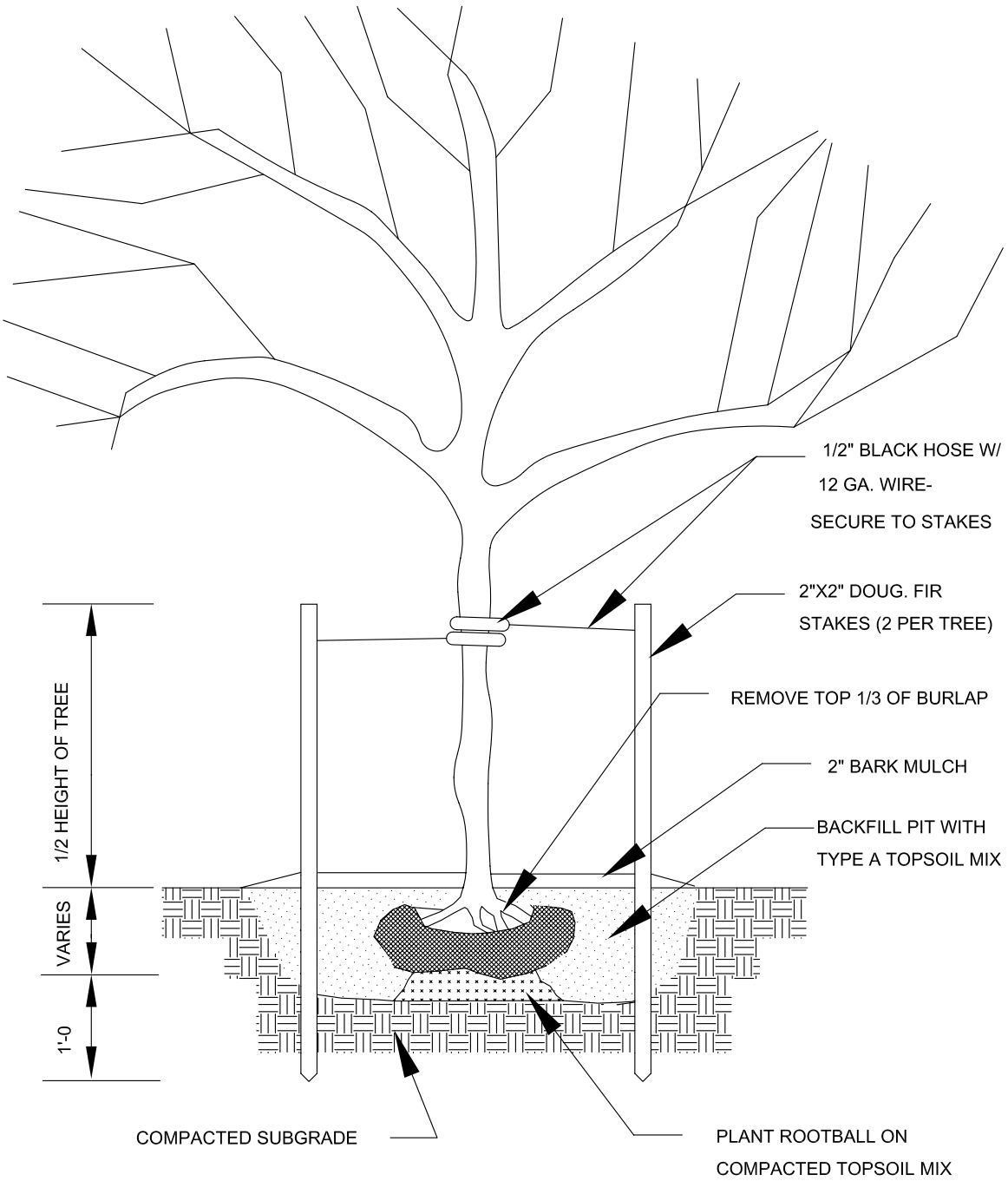

TREE PLANTING AND STAKING DETAIL

NTS

TREE PLANTING SHALL CONFORM TO THE
REQUIREMENTS OF SECTION 8-02 OF
THE WSDOT / APWA STANDARD SPECIFICATIONS.

SNOHOMISH WASHINGTON	**TYPICAL TREE PLANTING**	Approved By: City Engineer Date: May 30, 2004	**333** Number
	City of Snohomish Public Works Department		

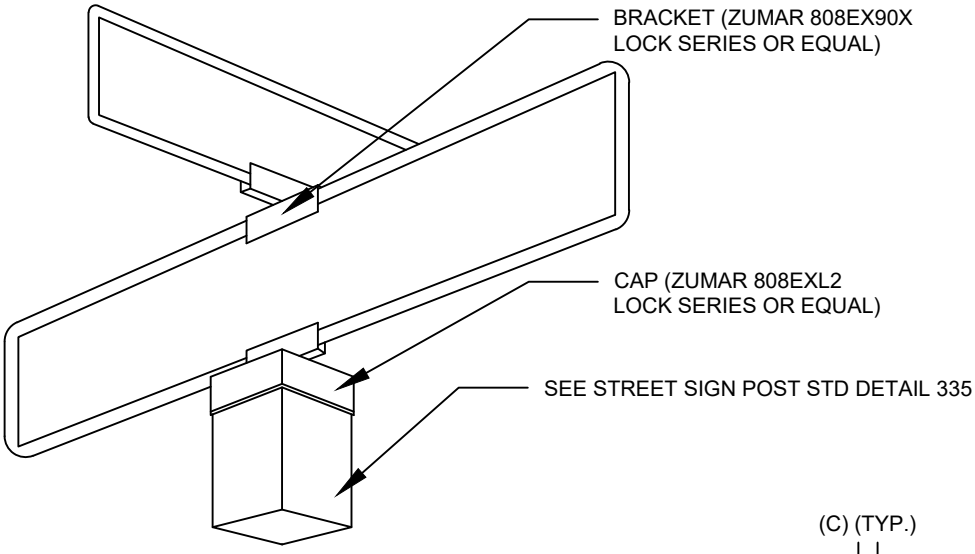

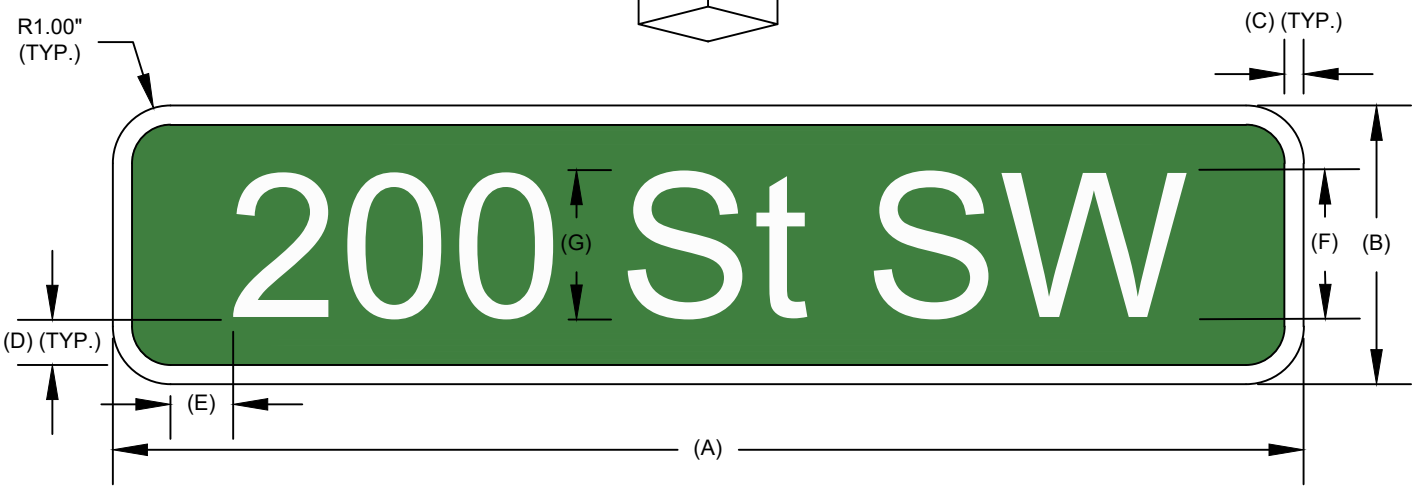

SIGN TYPE	A	B	C	D	E	F	G
30 MPH OR LESS	24" MIN	6"	0.5"	1.5"	1.5" MIN	4"	4"
35 MPH OR GREATER	24" MIN	8"	0.5"	2.5"	4" MIN	6"	6"

NOTES:

1. MATERIAL: 0.080 FLAT ALUMINUM WITH HIGH INTENSITY PRISMATIC GRADE SHEETING WITH ROUNDED CORNERS.
2. COLOR: GREEN BACKGROUND WITH WHITE LETTERS, NUMBERS, AND BORDER FOR PUBLIC STREETS. BLUE BACKGROUND WITH WHITE LETTERS, NUMBERS, AND BORDER FOR PRIVATE STREETS AND ADDRESSES.
3. SIGN SHALL BE DOUBLE FACED.
4. TEXT SHALL BE FHWA D SERIES FONT AND LAID OUT AS PER THE STANDARD HIGHWAY SIGNS AND MARKING (SHSM) BOOK.
5. ALL LETTERING SHALL BE COMPOSED OF A COMBINATION OF LOWER-CASE LETTERS WITH INITIAL UPPER-CASE LETTERS EXCEPT FOR GEOGRAPHIC DELINEATORS WHICH SHALL BE COMPOSED OF UPPER CASE LETTERS ONLY ABBREVIATED. FOR STREETS DESIGNATED AS AVENUES THE SPELLING OF THE GEOGRAPHIC DELINEATOR SHALL BE USED.
6. NUMBERED STREET NAMES SHALL USE THE ORDINAL FORM OF THE NUMBER SUCH AS ST, ND, RD, OR TH. FIRST ST THROUGH TENTH ST SHALL USE THE SPELLING OF THE NUMBERS.
7. NEW STREET NAMES SHALL BE SUBMITTED TO THE CITY FOR REVIEW AND DETERMINATION OF LETTERING AND SIZE.

City of Snohomish Washington	**STREET SIGN**	Approved By: Yosh Monzaki City Engineer Date: Dec 20, 2018	**334** Number
	City of Snohomish Public Works Department		

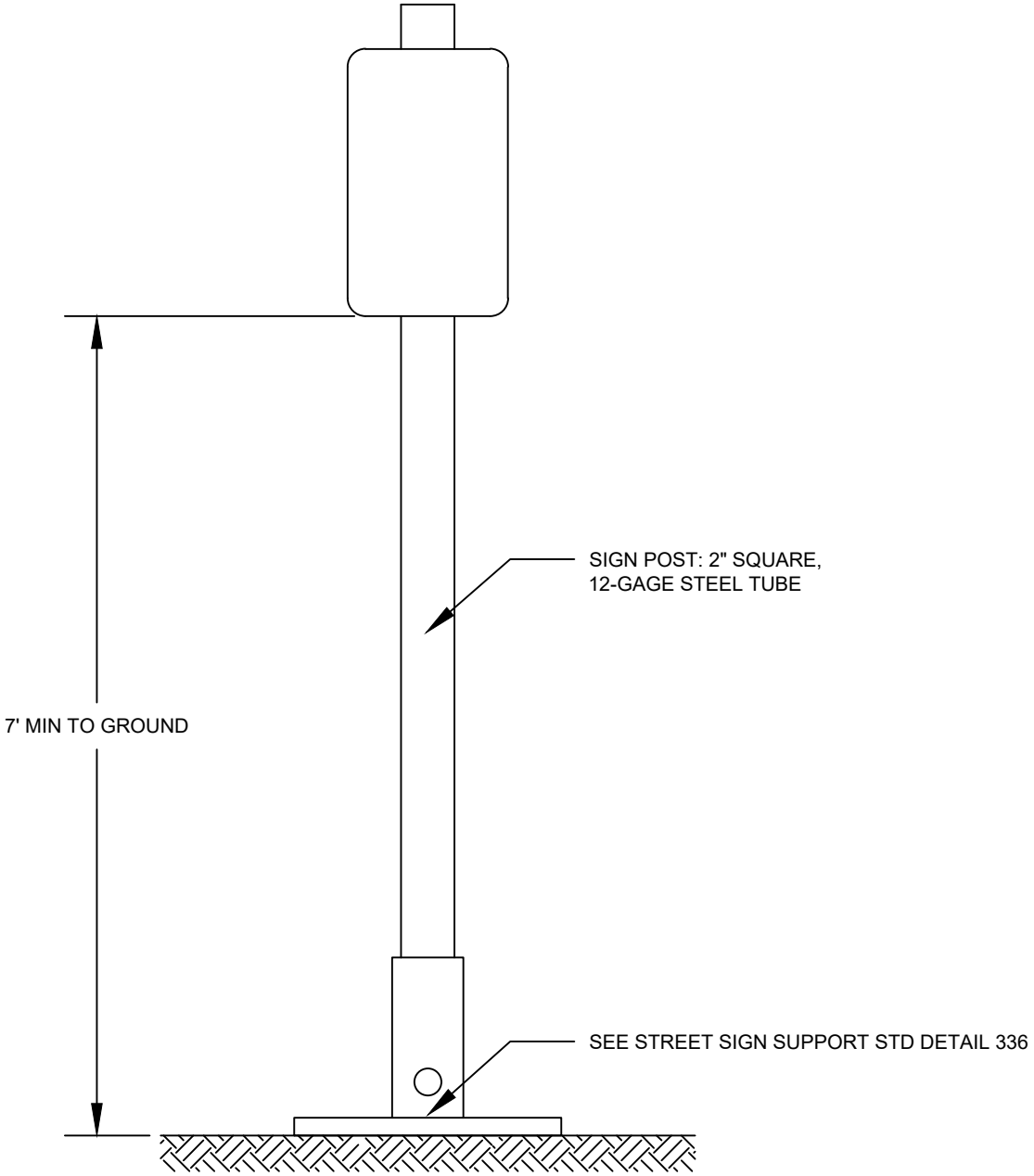

NOTES:

1. STREET SIGNS SHALL SATISFY ALL MUTCD REQUIREMENTS.
2. SIGN MATERIAL: 0.080 FLAT ALUMINUM WITH HIGH INTENSITY PRISMATIC GRADE SHEETING.
3. ALL SIGNS SHALL HAVE ANTI-GRAFFITI SIGN COATING CONSISTING OF 3M-1160 PREMIUM PROTECTIVE OVERLAY OR EQUAL.
4. SIGNS DIRECTLY ATTACHED TO POST SHALL BE RIVETED USING VCR231 JUMBO HEAD DRIVE STEEL RIVET OR EQUAL.
5. SIGN POST SHALL BE PERFORATED SQUARE STEEL POST AND SATISFY THE REQUIREMENTS OF WSDOT STANARD SPECIFICATION 9-06.
6. NO PORTION OF SIGN SHALL OVERHANG THE CURB.

City of Snohomish Washington	**STREET SIGN POST**	Approved By: Yosh Monzaki City Engineer Date: Nov 05, 2018	**335** Number
	City of Snohomish Public Works Department		

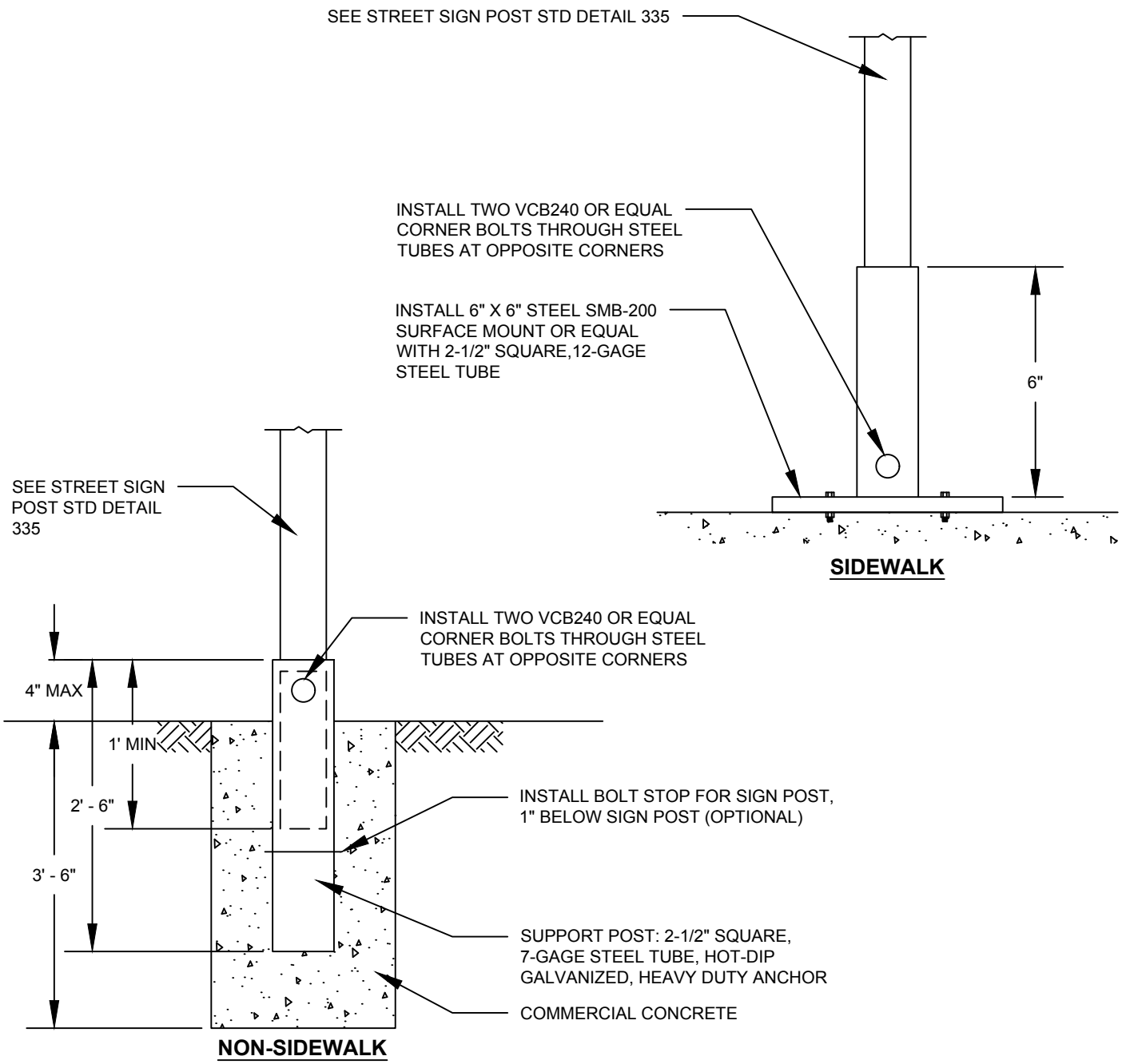

NOTES:

1. SIGN POST SHALL BE PERFORATED SQUARE STEEL POST AND SATISFY THE REQUIREMENTS OF WSDOT STANDARD SPECIFICATION 9-06.
2. SUPPORT POST FOR NON-SIDEWALK AREA SHALL NOT BE PERFORATED.
3. INSTALL SURFACE MOUNT WITH MANUFACTURER SUPPLIED CONCRETE ANCHOR BOLTS (4 EACH).
4. ALL POSTS SHALL BE TWO-WAY PLUMB.
5. LOCATION OF SIGN AND SIGN SUPPORT SHALL BE DETERMINED BY THE CITY.

City of Snohomish Washington	**STREET SIGN SUPPORT**	Approved By: Yosh Monzaki City Engineer Date: Nov 05, 2018	**336** Number
	City of Snohomish Public Works Department		